Reservoir Accesories Catalog

Connecting Fluid Power for over 60 Years

NOTE: Due to Magnaloy's policy of continuous improvement, specifications are subject to change without notice.
* Check with the factory or our Web Site at www.magnaloy.com for the latest information.

Magnaloy • 170 N Industrial Hwy. Alpena, MI 49707 • 989 356-2186
www.magnaloy.com A Division of Douville Johnston Corporation

Catalog No. 2025.3.14 © 2025 Magnaloy

Product Index

RESERVOIR ACCESSORIES - SECTION 5

Filler Breather Adaptors 2
Filler Breathers 3
Reservoir Flanges 5
SAE Full and Half Couplings 8
Channel Mounted Cushion Clamps 9
Suction Strainers 13
Tank Diffusers 15
Spin-On Filters 17
Tank Top Filters 19
Pressure Gauges 24
Gauge Isolators 26
Pressure Switches 27
Liquid Level Gauges 28
Motor Dampening Bars 30
Motor Base Plates 35
Modular O-Ring Kit 36

REFERENCE MATERIAL INDEX 43

Check out our **Product Configurator Program**

https://configurator.magnaloy.com

THIS PAGE LEFT BLANK INTENTIONALLY

High Capacity Spin-On Adapters

Converts standard breather installation to accept a high efficiency spin-on air breather

Features:

- **Material** - Anodized 6061 Aluminum
- **Flange Adapter** - Accepts 1 1/2-16 UN Threaded Spin-On Filters and uses the same mounting bolt circle as our Filler Breather Screens and comes complete with mounting hardware and gaskets.
- **Bayonet Adapters** - Accept either 1 1/2-16 UN, 1 1/8-16 UN or 1-12 UN threaded Spin-On Filters, fits all popular filler breather bayonet flanges and utilizes a Buna-N gasket to insure proper sealing.

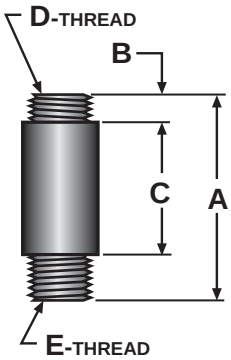

NPT Style Spin-On

Part Number	A	B	C	D	E
FBS-10012-012P	2.80	.435	1.572	1-12 UN	3/4 -NPT
FBS-10216-012P	2.80	.435	1.572	1 1/8-16 UN	3/4 -NPT
FBS-10816-104P	3.25	.435	1.945	1 1/2-16 UN	1 1/4 -NPT

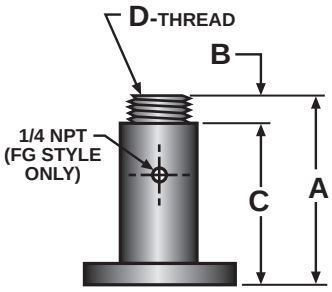

Flange Style Spin-On

Part Number	A	B	C	D
FBS-10816-F	3.051	.435	2.295	1 1/2-16 UN
FBS-10816-FG	4.756	.435	4.321	1 1/2-16 UN

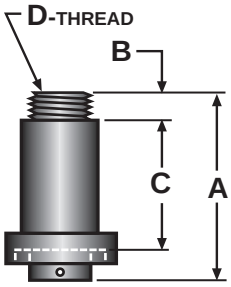

Bayonet Style Spin-On

Part Number	A	B	C	D
FBS-10012-B	2.135	.435	1.05	1-12 UN
FBS-10216-B	2.135	.435	1.05	1 1/8-16 UN
FBS-10816-B	2.135	.435	1.05	1 1/2-16 UN

magnaloy

MB Type - Mini Breather

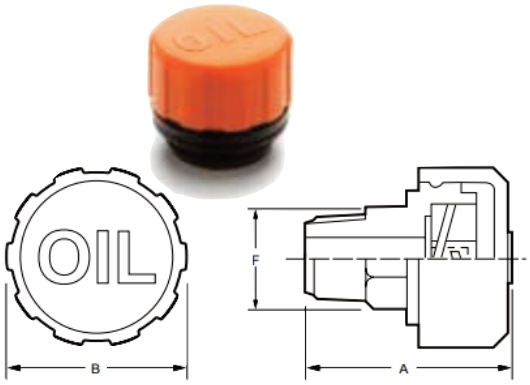

Allows Filtered Air to Easily Flow in and out of the Hydraulic Reservoir while Preventing Airborne Contaminants from Entering the System.

Filler Breather Caps

Types & Features:

A Cap - 20 GPM, 10 Micron Filter, Stainless Steel
D Cap - 30 GPM, 10 Micron Filter, Stainless Steel
H Cap - 120 GPM, 10 Micron Filter, Stainless Steel
K Cap - Pressure Cap, 20 PSI relief, Chrome Plated
MB Cap - 10 GPM, 10 Micron Filter, Shatter Resistant Plastic (Temp Rating 225°F)

Type	Part Number	Mounting Type	A	B	F
A	FB-C-A	Bayonet	1.33	2.55	
D	FB-C-D	Bayonet	1.30	2.55	
H	FB-C-H	Bayonet	1.56	3.00	
K	FB-C-K	Bayonet	.94	2.88	
MB	FB-C-MB-P004	1/4 NPT	1.80	1.70	1-1/16
MB	FB-C-MB-P006	3/8 NPT	1.73	1.65	3/4
MB	FB-C-MB-P008	1/2 NPT	1.85	1.65	1
MB	FB-C-MB-P012	3/4 NPT	1.85	1.65	1-1/8

Mounting Flanges

Features:

Blue Zinc Plated
Available in Three Lengths

Part Number	Height	Description	Code
FB-F-008	.500	008 Mounting Flange	008
FB-F-108	1.50	108 Mounting Flange	108
FB-F-600	6.00	600 Mounting Flange	600

Filler Breather Screens

Materials & Features:

Part Number	Code	Mesh	Material	Length
FB-S-C16	C	16 Mesh	Stainless	3.00
FB-S-P	P	30 Mesh	Nylon	4.00
FB-S-R *	R	30 Mesh	Brass	4.00
FB-S-V *	V	30 Mesh	Brass	9.25
FB-S-W	W	30 Mesh	Stainless	3.25
FB-S-X	X	30 Mesh	Stainless	6.25
FB-S-Y	Y	30 Mesh	Stainless	8.25
FB-S-Z	Z	30 Mesh	Stainless	10.25

* Check with factory for availability

Filler Breather Options:

PL - Pad Lock

L - Locking Cap

D - Dipstick

Part Number	Code	Description
FB-O-PL	PL	Pad Lock - not included with locking cap option
FB-O-L	L	Cap Lock Kit
FB-O-D*	D	Dipstick - specify length, measured from bottom of mounting flange to end of dipstick

* **Dipstick Option can be ordered as part of a cap assembly ONLY.**

How to Order:

Standard Assemblies:

Code	Description
FB-A008W	Stainless Steel, Weatherproof, 10 micron, 20 GPM Cap; 1/2" Mounting Flange; 30 mesh, 3 1/4", Stainless Steel Screen
FB-A008P	Stainless Steel, Weatherproof, 10 micron, 20 GPM Cap; 1/2" Mounting Flange; 30 mesh, 4", Nylon Screen
FB-K008W	Pressurized, Chrome Plated, 20 PSI Cap; 1/2" Mounting Flange; 30 mesh, 3 1/4", stainless steel Screen

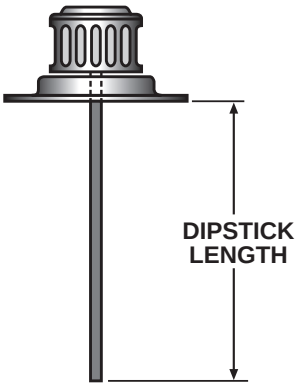

Custom Assemblies:

Select the components that best meet your particular hydraulic system requirements and custom build the part number as follows:

FB - A 008 Y - D8

Code	Option
Blank	No Options
PL	Pad Lock
L	Locking Cap
D	Dipstick

Code	Cap Type
A	A Cap
D	D Cap
H	H Cap
K	K Cap

Code	Mounting Flange
008	1/2" Height
108	1 1/2" Height
600	6" Height

Code	Screen Material
N	6" Brass
P	4" Nylon
R	4" Brass
S	14 1/2" Zinc Plated
V	9 1/4" Brass
W	3 1/4" Stainless
X	6 1/4" Stainless
Y	8 1/2" Stainless
Z	10 1/4" Stainless

magnaloy

Premium Line Suction and Return Line Flanges - heavy duty, positive sealing Suction and Return Line Flanges

Features:

- Positive Urethane Seal - protects against particulate and liquid contamination.
- Mounting Hardware - required screws, bolts, washers and gaskets are included.
- Available in Many Popular Tube and Pipe Sizes - 1/2" thru 2" Pipe and Tube.
- Large Suction Line Flange Plate - allows easy access for suction line strainer installation and maintenance.
- Rigid/Heavy Duty Zinc Plated Die Cast Flange - will not deflect or distort, provides sealing forces to urethane seal.

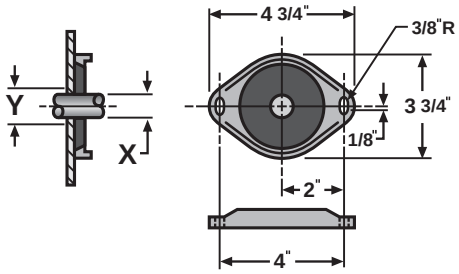

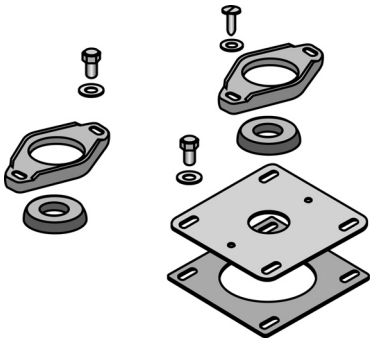

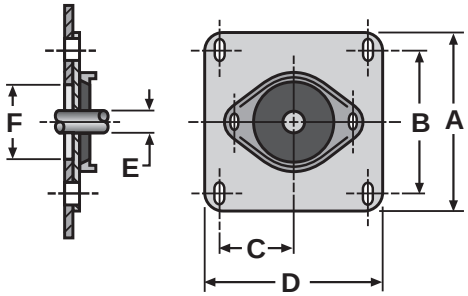

Pipe Sizes: from 1/2" to 2"

Return Line Flange:

Part Number	Nominal Pipe Size	Pipe OD X	Clearance Hole Dia. Y
RLF-012P	3/4"	1.05	1.19
RLF-100P	1"	1.32	1.44
RLF-104P	1 1/4"	1.66	1.81
RLF-108P	1 1/2"	1.90	2.06
RLF-200P	2"	2.38	2.50

Suction Line Flange:

Part Number	Nominal Pipe Size	A	B	C	D	Pipe OD E	Clearance Hole Dia. F
SLF-012P	3/4"	5.50	4.25	2.12	5.25	1.05	4.25
SLF-100P	1"	5.50	4.25	2.12	5.25	1.32	4.25
SLF-104P	1 1/4"	5.50	4.25	2.12	5.25	1.66	4.25
SLF-108P	1 1/2"	7.50	6.25	3.12	7.25	1.90	6.25
SLF-200P	2"	7.50	6.25	3.12	7.25	2.38	6.25

Tube Sizes: from 1/2" to 2"

Return Line Flange:

Part Number	Nominal Tube Size	Tube OD X	Clearance Hole Dia. Y
RLF-008T	1/2"	0.50	.75
RLF-012T	3/4"	.75	1.00
RLF-100T	1"	1.00	1.25
RLF-104T	1 1/4"	1.25	1.50
RLF-108T	1 1/2"	1.50	1.75
RLF-200T	2"	2.0	2.25

Suction Line Flange:

Part Number	Nominal Tube Size	A	B	C	D	Tube OD E	Clearance Hole Dia. F
SLF-008T	1/2"	5.50	4.25	2.12	5.25	0.50	4.25
SLF-012T	3/4"	5.50	4.25	2.12	5.25	.75	4.25
SLF-100T	1"	5.50	4.25	2.12	5.25	1.00	4.25
SLF-104T	1 1/4"	5.50	4.25	2.12	5.25	1.25	4.25
SLF-108T	1 1/2"	7.50	6.25	3.12	7.25	1.50	6.25
SLF-200T	2"	7.50	6.25	3.12	7.25	2.00	6.25

Economy Suction and Return Line Flanges - an alternative to the Magnaloy Premium Line of Suction and Return Line Flanges.

Features:

- Tight Fitting Buna-N Washer to provide positive sealing against contaminants.
- Required Mounting Hardware included.
- Available in Many Popular Tube and Pipe Sizes.
- 2 Large Flange Plate Sizes offered in Suction Line Flanges provide easy access to Suction Line Strainer.

Economy Return Line Flanges:

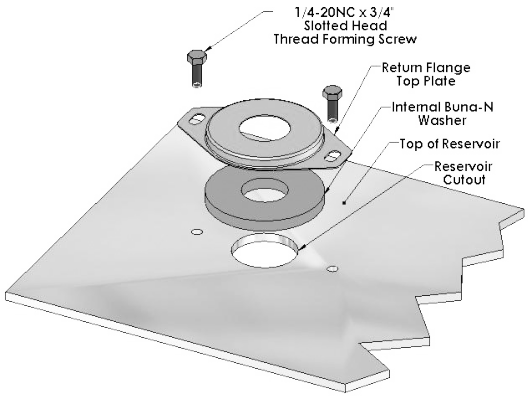

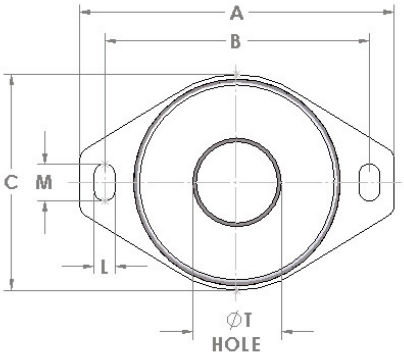

Mounting Hole Dimensions:

L	M
5/16	9/16

Pipe Sizes:

Part Number	Nominal Pipe Size	A	B	C	T[2]	Reservoir Cutout
RLFE-000P[1]	N/A	4 3/4	4	3 1/8	1 3/16	N/A
RLFE-008P	1/2”	4 3/4	4	3 1/8	1 3/16	1 3/16
RLFE-012P	3/4”	4 3/4	4	3 1/8	1 3/4	1 3/4
RLFE-100P	1”	4 3/4	4	3 1/8	1 3/4	1 3/4
RLFE-104P	1 1/4”	4 3/4	4	3 1/8	2 1/2	2 1/2
RLFE-108P	1 1/2”	4 3/4	4	3 1/8	2 1/2	2 1/2
RLFE-200P	2”	4 3/4	4	3 1/8	2 1/2	2 1/2

Tube Sizes:

Part Number	Nominal Tube Size	A	B	C	T[2]	Reservoir Cutout
RLFE-006T	3/8”	4 3/4	4	3 1/8	1 3/16	1 3/16
RLFE-008T	1/2”	4 3/4	4	3 1/8	1 3/16	1 3/16
RLFE-012T	3/4”	4 3/4	4	3 1/8	1 3/16	1 3/16
RLFE-100T	1”	4 3/4	4	3 1/8	1 3/4	1 3/4
RLFE-104T	1 1/4”	4 3/4	4	3 1/8	2 1/2	2 1/2
RLFE-108T	1 1/2”	4 3/4	4	3 1/8	2 1/2	2 1/2
RLFE-200T	2”	4 3/4	4	3 1/8	2 1/2	2 1/2

1 Use this Blank Flange for covering unused openings or for custom Pipe or Tube Sizes.
2 Opening in metal flange - required clearance to Pipe or Tube OD.

magnaloy

Economy Suction Line Flanges:

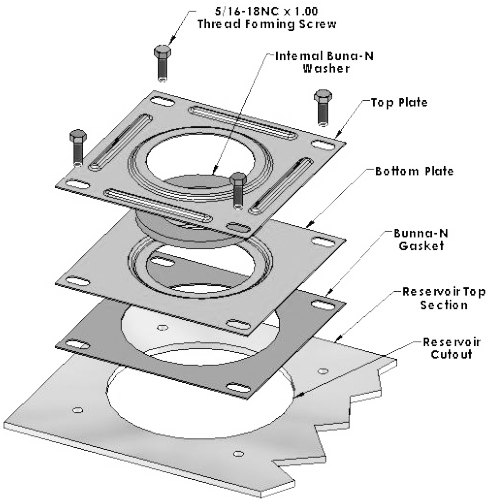

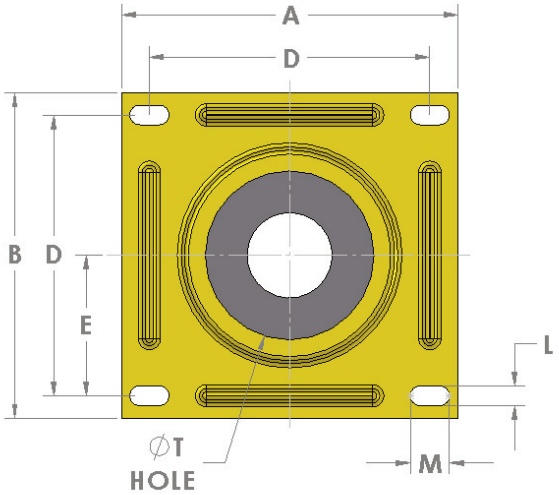

Mounting Hole Dimensions:

L	M
7/16	7/8

Pipe Sizes:

Part Number	Nominal Pipe Size	A	B	D	E	T[2]	Reservoir Cutout
SLFE-500-000P[1]	N/A	5 1/2	5 1/4	4 1/4	2 1/8	1 3/16	4 1/2
SLFE-500-008P	1/2”	5 1/2	5 1/4	4 1/4	2 1/8	1 3/16	4 1/2
SLFE-500-012P	3/4”	5 1/2	5 1/4	4 1/4	2 1/8	1 3/16	4 1/2
SLFE-500-100P	1”	5 1/2	5 1/4	4 1/4	2 1/8	1 3/4	4 1/2
SLFE-500-104P	1 1/4”	5 1/2	5 1/4	4 1/4	2 1/8	1 3/4	4 1/2
SLFE-500-108P	1 1/2”	5 1/2	5 1/4	4 1/4	2 1/8	2 1/2	4 1/2
SLFE-500-200P	2”	5 1/2	5 1/4	4 1/4	2 1/8	2 1/2	4 1/2
SLFE-700-108P	1 1/2”	7 1/2	7 1/4	6 1/4	3 1/8	3 1/8	6 1/2
SLFE-700-200P	2”	7 1/2	7 1/4	6 1/4	3 1/8	3 1/8	6 1/2
SLFE-700-208P	2 1/2”	7 1/2	7 1/4	6 1/4	3 1/8	3 3/4	6 1/2
SLFE-700-300P	3”	7 1/2	7 1/4	6 1/4	3 1/8	3 3/4	6 1/2

Tube Sizes:

Part Number	Nominal Tube Size	A	B	D	E	T[2]	Reservoir Cutout
SLFE-500-006T	3/8”	5 1/2	5 1/4	4 1/4	2 1/8	1 3/16	4 1/2
SLFE-500-008T	1/2”	5 1/2	5 1/4	4 1/4	2 1/8	1 3/16	4 1/2
SLFE-500-012T	3/4”	5 1/2	5 1/4	4 1/4	2 1/8	1 3/16	4 1/2
SLFE-500-100T	1”	5 1/2	5 1/4	4 1/4	2 1/8	1 3/4	4 1/2
SLFE-500-104T	1 1/4”	5 1/2	5 1/4	4 1/4	2 1/8	1 3/4	4 1/2
SLFE-500-108T	1 1/2”	5 1/2	5 1/4	4 1/4	2 1/8	1 3/4	4 1/2

1 Use this Blank Flange for covering unused openings or for custom Pipe or Tube Sizes.
2 Opening in metal flange - required clearance to Pipe or Tube OD.

Magnaloy • 170 N Industrial Hwy. Alpena, MI 49707 • 989 356-2186
www.magnaloy.com A Division of Douville Johnston Corporation

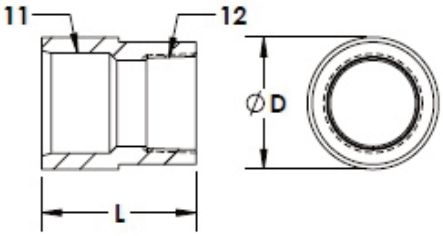

Full Couplings

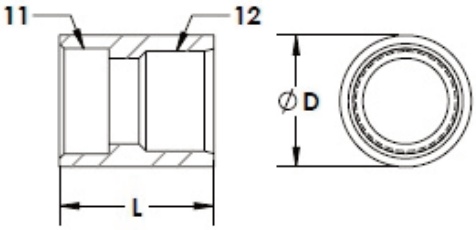

Socket Weld Full Couplings

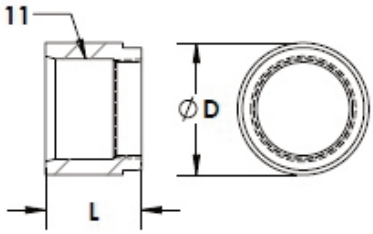

Half Couplings

SAE to NPT Full Couplings:

Part Number	D1 Diameter	D2 Diameter	L1 Length	L2 Length	T1 SAE Size	T1 Thread	T2 Thread
4S-4N-TD	1.00	.875	1.27	.64	#4	7/16-20 UNF	1/4" NPT
6S-6N-TD	1.13	1.00	1.50	.75	#6	9/16-18 UNF	3/8" NPT
8S-8N-TD	1.25	1.125	1.63	.82	#8	3/4-16 UNF	1/2" NPT
10S-12N-TD	1.50	1.375	1.75	.88	#10	7/8-14 UNF	3/4" NPT
12S-12N-TD	1.50	1.375	2.06	1.03	#12	1-1/16-12 UN	3/4" NPT
16S-16N-TD	1.75	1.625	2.06	1.03	#16	1-5/16-12 UN	1" NPT

SAE to Socket Weld Full Couplings:

Part Number	D Diameter	L Length	T1 SAE Size	T1 Thread	T2 Socket
8S-8W	1.25	1.63	#8	3/4-16 UNF	1/2" Pipe
12S-12W	1.50	2.06	#12	1-1/16-12 UN	3/4" Pipe
16S-16W	1.75	2.06	#16	1-5/16-12 UN	1" Pipe
20S-20W	2.25	2.06	#20	1-5/8-12 UN	1-1/4" Pipe
24S-24W	2.75	2.20	#24	1-7/8-12 UN	1-1/2" Pipe

SAE Half Couplings:

Part Number	D1 Diameter	D2 Diameter	L1 Length	L2 Length	T1 SAE Size	T1 Thread
4S-TD	0.88	.75	1.00	.25	#4	7/16-20 UNF
6S-TD	1.00	.875	1.00	.25	#6	9/16-18 UNF
8S-TD	1.25	1.125	1.06	.25	#8	3/4-16 UNF
10S-TD	1.38	1.25	1.06	.25	#10	7/8-14 UNF
12S-TD	1.50	1.375	1.28	.25	#12	1-1/16-12 UN
16S-TD	1.75	1.625	1.28	.25	#16	1-5/16-12 UN
20S-TD	2.25	2.125	1.28	.25	#20	1-5/8-12 UN
24S-TD	2.75	2.50	1.28	.25	#24	1-7/8-12 UN

Channel Mounted Cushion Clamps

Magnaloy offers a complete line of channel-mounted cushion clamps for a great looking, vibration free tube/pipe mounting solution.

Features:

- Fast and simple installation - one person/one tool required.
- Cushion material is a thermoplastic elastomer resistant to most fuels, oils, gases, greases, solvents, mineral acids and other materials.
- Temperature range -65°F (-54°C) to +275°F (+135°C).
- Modular design allows adding or changing piping without disturbing adjacent piping.
- Piping sizes can be mixed to suit installation requirements.
- Metal components are Tri-Valent (non-hex) plated.
- Also available in 304 and 316 stainless steel.

Materials:

Standard Cushion Clamp Materials:

- Cushion material is TPE plastic
- Clamps are 1008-1010 carbon steel
- Studs are welded carbon steel
- Locknut is nylon insert type
- All metal components have Tri-Valent plating

Optional Cushion Clamp Materials:

Code	Description
-444	*304 Stainless Steel Clamps*
	304 Stainless Steel Stud (welded)
	304 Stainless Steel Locknut
-464	*304 Stainless Steel Clamps*
	316 Stainless Steel Hex Head Bolt (loose packed)
	304 Stainless Steel Locknut
-644	*316 Stainless Steel Clamps*
	304 Stainless Steel Stud (welded)
	304 Stainless Steel Locknut
-666	*316 Stainless Steel Clamps*
	316 Stainless Steel Hex Head Bolt (loose packed)
	316 Stainless Steel Locknut

Clamp Assembly Part Numbers, Availability and Dimensional Data

Clamp Assembly Part Number Breakdown:

MCC - 008P -xxx

- *Optional Material CODE* (*see page 9, leave blank for standard*)
- *Piping Size Code*
- *Magnaloy Cushion Clamp*

See Reference Section, page 63, for Manufacturers Cross References

PIPE Sizes:

PIPE Nominal Size	1/4	3/8	1/2	3/4	1	1 1/4
Pipe Outside Diameter	.54	.675	.84	1.05	1.315	1.665
Pipe Size CODE	**008P**	**012P**	**016P**	**024P**	**100P**	**108P**
Quantity per Box [1]	25	25	25	20	20	20
Carbon Steel 5S, 10S, 40, 80	o	o	o	o	o	o
Stainless 5S, 10S, 40, 80	o	o	o	o	o	o
Red & Yellow Brass & Copper	o	o	o	o	o	o
Aluminum 5S, 10S, 40, 80	o	o	o	o	o	o
PVC 48, 80, 120	o	o	o	o	o	o
CPVC 40, 80	o	o	o	o	o	o
PE 40, 80	o	o	o	o	o	o
PP 40, 80	o	o	o	o	o	o
PVDF 80		o	o	o	o	o
PB 40		o	o	o	o	o
ABS 40, 80		o	o	o	o	o
Fiberglass			o	o	o	o
A	1.41	1.59	1.91	2.16	2.75	3.03
B	.63	.45	.59	.72	.91	1.03
C	.075	.075	.075	.105	.119	.119
D*	.91	1.07	1.45	1.79	2.22	2.47

*** Minimum Required Installation Dimension**

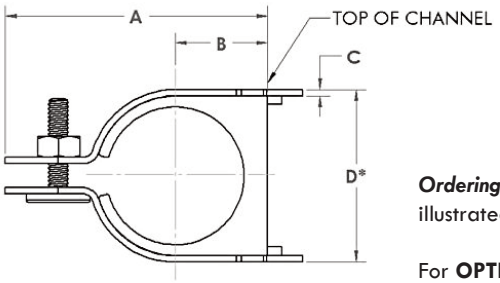

Ordering Information: To order the standard Cushion Clamp, use **MCC-** followed by the Piping Size CODEs as illustrated in the tables on this page and the next page, depending Pipe or Tube sizes.

For **OPTIONAL MATERIALS** consult page 9 and select the material combination best suited for your requirements. Use the part number as above, followed by the material **CODE** from page 9.

TUBE Sizes:

TUBE Outside Diameter	.250	.312	.375	.470	.500	.625	.750	.875	1.000	1.125	1.190	1.250
Tube Size CODE	**008T**	**010T**	**012T**	**015T**	**016T**	**020T**	**024T**	**028T**	**100T**	**104T**	**106T**	**108T**
Quantity per Box [1]	25	25	25	25	25	25	25	25	25	20	20	20
ACR Tube			o	o	o	o	o	o		o	o	o
Refrigeration Service	o	o	o	o	o	o	o	o		o	o	o
Type "K" Copper			o	o	o	o	o	o		o	o	o
Type "L" Copper			o	o	o	o	o	o		o	o	o
Type "M" Copper			o	o	o	o	o	o		o	o	o
Steel	o	o	o	o	o	o	o	o	o	o	o	o
Stainless Steel	o	o	o	o	o	o	o	o	o	o	o	o
Aluminum			o		o	o	o	o	o	o	o	o
PB			o		o	o		o		o	o	o
PVC			o			o		o		o	o	o
CPVC			o		o	o		o		o	o	o
PE			o			o		o		o	o	o
A	1.11	1.24	1.24	1.36	1.36	1.50	1.78	1.91	2.03	2.16	2.30	2.30
B	.22	.28	.28	.34	.34	.41	.53	.58	.66	.72	.72	.78
C	.075	.075	.075	.075	.075	.075	.075	.075	.105	.105	.105	.105
D*	.62	.75	.75	.87	.87	1.00	1.33	1.45	1.66	1.79	1.92	1.92

Note 1: Clamps are sold in single quantities, box quantity indicated for ordering convenience.

For Hoses - measure hose outside diameter and select the nearest O.D. size above.

Note: Anchor Channel is ordered separately. See page 12 for part numbers.

magnaloy

***PIPE Sizes** (continued):*

1 1/2	2	2 1/2	3	3 1/2	4	5	6
1.90	2.375	2.875	3.5	4.0	4.5	5.563	6.625
116P	**200P**	**216P**	**300P**	**316P**	**400P**	**500P**	**600P**
20	10	5	5	5	5	Each	Each
o	o	o	o	o	o	o	o
o	o	o	o	o	o	o	o
o	o	o	o	o	o		
o	o	o	o	o	o	o	o
o	o	o	o	o	o	o	o
o	o	o	o	o	o	o	o
o	o	o	o	o	o	o	o
o	o	o	o	o	o	o	o
o	o	o	o	o	o	o	o
o	o	o	o	o	o	o	o
o	o	o	o	o	o	o	o
o	o	o	o	o	o	o	o
3.28	3.78	4.27	4.91	5.53	6.03	7.03	8.03
1.16	1.41	1.66	1.97	2.28	2.53	3.03	3.53
.119	.119	.119	.119	.119	.119	.135	.135
2.47	3.22	3.72	4.36	4.97	5.47	6.47	7.47

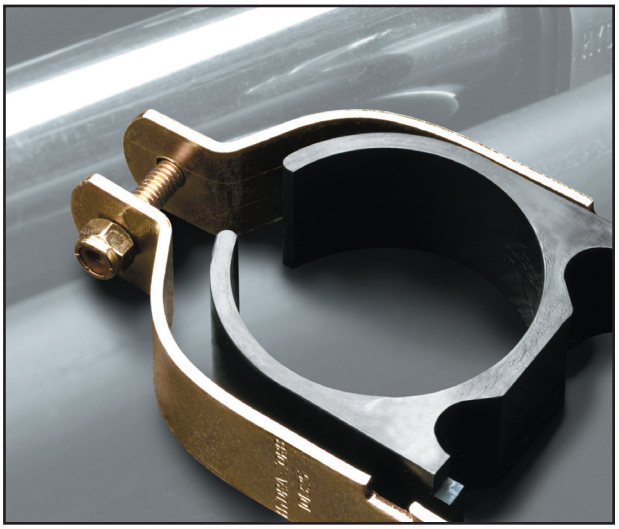

5

Ordering Examples: To order the standard 2 1/2" Tube Cushion Clamp - order part number MCC-216T
To order the standard 1 1/4" Pipe Cushion Clamp - order part number MCC-108P
To order the 2 1/2" Tube Cushion Clamp with 304 Stainless Steel Clamps, stud, and locknut - order MCC-216T-444
To order the 1 1/4" Pipe Cushion Clamp with galvanized powder coated clamps, 316 stainless steel stud, and 304 stainless steel locknut - oder part number MCC-108P-G64

Note: Anchor Channel is ordered separately. See page 12 for more information and part numbers.

***TUBE Sizes** (continued):*

1.375	1.500	1.625	1.750	1.875	2.000	2.125	2.250	2.375	2.500	2.625	2.875	3.000	3.125	3.625	4.125
112T	**116T**	**120T**	**124T**	**128T**	**200T**	**204T**	**208T**	**212T**	**216T**	**220T**	**228T**	**300T**	**304T**	**320T**	**404T**
20	20	20	20	20	10	10	10	10	5	5	5	5	5	5	5
o		o				o		o		o			o	o	o
o		o													
o		o				o				o			o	o	o
o		o				o				o			o	o	o
o		o				o				o			o	o	o
o	o	o	o	o	o	o	o	o	o	o	o	o	o	o	o
o	o	o	o	o	o	o	o	o	o	o	o	o	o	o	o
	o				o	o			o	o			o	o	o
o		o				o				o			o	o	o
o		o			o					o			o	o	o
o					o					o			o	o	o
o		o				o				o			o	o	o
2.75	2.75	3.03	3.03	3.28	3.28	3.53	3.78	3.78	4.03	4.03	4.27	4.52	4.52	5.03	5.66
.91	.91	1.03	1.03	1.16	1.16	1.28	1.41	1.41	1.53	1.53	1.66	1.78	1.78	2.03	2.34
.119	.119	.119	.119	.119	.119	.119	.119	.119	.119	.119	.119	.119	.119	.119	.119
2.22	2.22	2.47	2.47	2.47	2.72	2.97	3.22	3.22	3.47	3.47	3.72	3.97	3.97	4.47	5.09

Note 1: Clamps are sold in single quantities, box quantity indicated for ordering convenience.

5

Anchor channels including single and double have been **discontinued** and are no longer available.

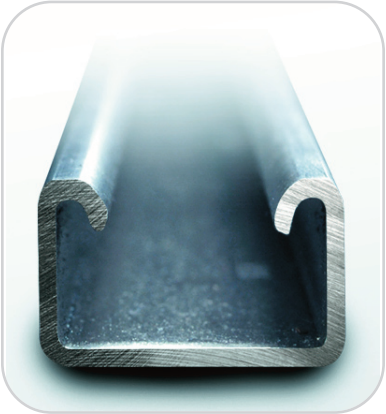

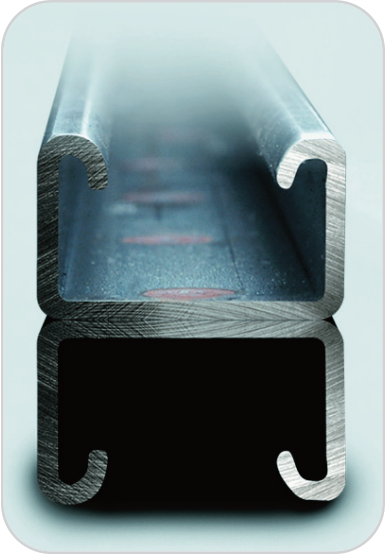

magnaloy

Internally Mounted Tank Filters - your front-line defense against particle contamination

Features:

- Die cast aluminum end covers.
- By-Pass valve available on most models(see tables).
- End caps are designed to provide a positive interlock with epoxy bond to prevent leakage.
- Rated flow capacity at 5 ft/sec.
- Suitable with all petroleum base oils and fire retardant hydraulic fluids, coolants and lubricants.

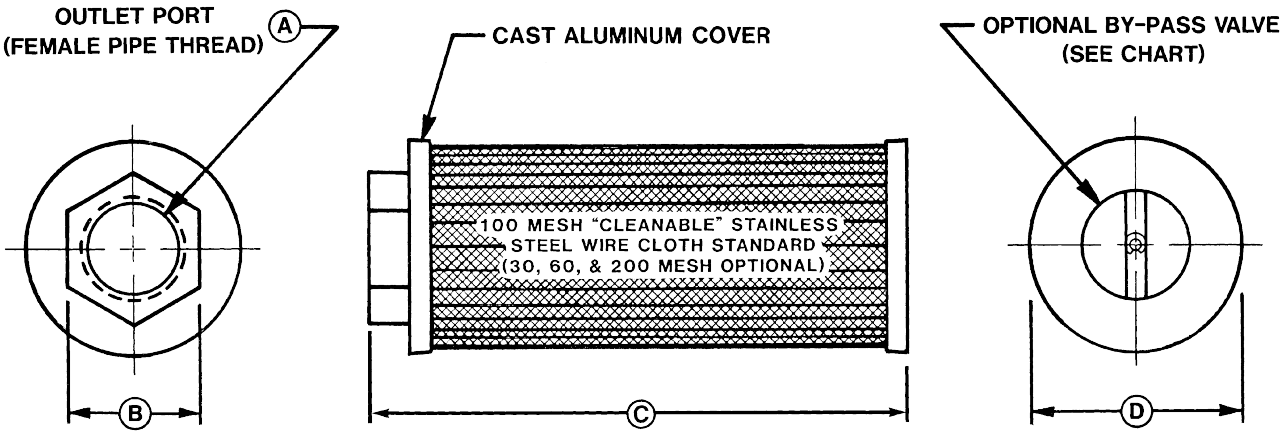

Part Number	A Outlet Port	B Wrench Flat	C Overall Length	D Outside Diameter	Rated Flow @ 5 ft/sec
SS-003P006-1-0[1]	3/8" NPT	1.20"	3.00"	2.75"	3 GPM
SS-005P008-1-X[1]	1/2" NPT	1.20"	3.25"	2.75"	5 GPM
SS-008P012-1-X[1]	3/4" NPT	1.50"	3.25"	2.75"	8 GPM
SS-010P100-1-X[1]	1" NPT	1.75"	5.50"	2.75"	10 GPM
SS-023P104-X-X	1 1/4" NPT	2.25"	6.60"	3.20"	23 GPM
SS-032P108-X-X	1 1/2" NPT	2.35"	8.60"	3.20"	32 GPM
SS-053P200-X-X	2" NPT	3.00"	7.20"	4.20"	53 GPM
SS-075P208-X-X	2 1/2" NPT	3.50"	9.30"	4.20"	75 GPM
SS-116P300-X-X	3" NPT	4.00"	12.50"	4.20"	116 GPM

1 - Standard 100 Mesh, contact factory for other Mesh sizes.

How to Order:

SS-003P006-1-0

Model Code
003P006
005P008
008P012
014P100
023P104
032P108
053P200
075P208
116P300

Code	By-Pass Valve Setting
0	No By-Pass Valve
3	3 PSI
5	5 PSI

Code	Wire Cloth Mesh
1	100 Mesh (Std)
3	30 Mesh

Externally Mounted Tank Filters - your front-line defense against particle contamination

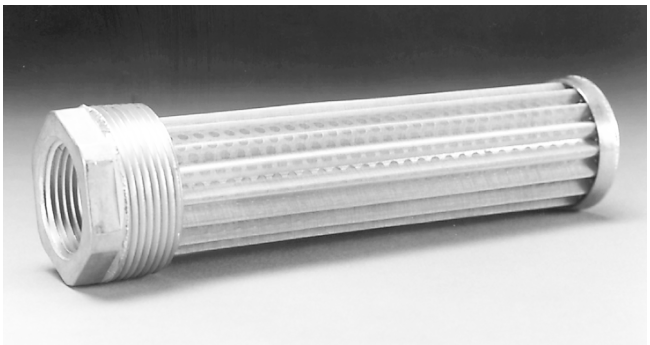

Features:

- Die cast aluminum end covers.
- By-Pass valve available on most models(see tables).
- End caps are designed to provide a positive interlock with epoxy bond to prevent leakage.
- Rated flow capacity at 5 ft/sec.
- Suitable with all petroleum base oils and fire retardant hydraulic fluids, coolants and lubricants.

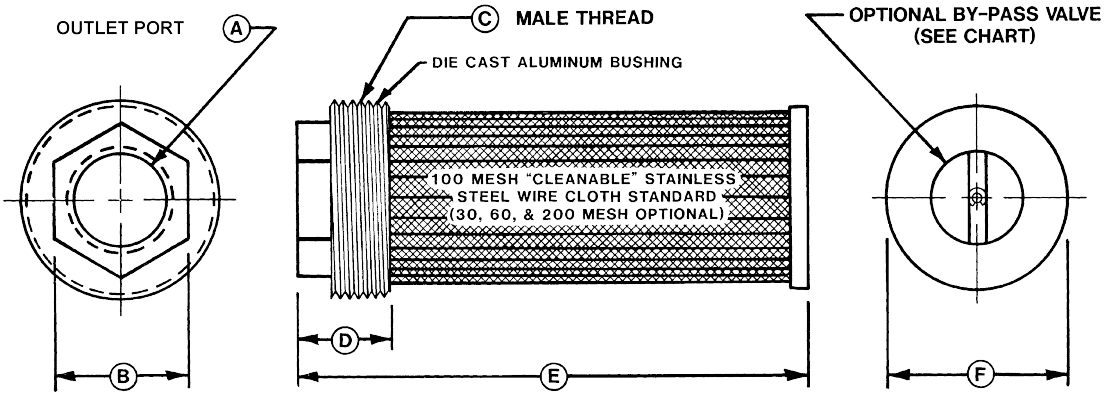

Part Number	A Outlet Port	B Hex Size	C Male Thread	D Fitting Length	E Overall Length	F Cover Diameter	Rated Flow @ 5 ft/sec
SS-008P012/P104-X-X	3/4" NPT	1.50"	1 1/4" NPT	1.10"	6.90"	1.50"	8 GPM
SS-014P100/P108-X-X	1" NPT	1.75"	1 1/2" NPT	1.10"	6.90"	1.70"	14 GPM
SS-014P100/P300-X-X	1" NPT	2.50"	3" NPT	1.50"	4.70"	3.20"	14 GPM
SS-014S020/P300-X-X	#20 SAE	2.50"	3" NPT	1.50"	8.70"	3.20"	14 GPM
SS-021S024/P300-X-X	#24 SAE	2.50"	3" NPT	1.50"	8.70"	3.20"	21 GPM
SS-023P104/P200-X-X	1 1/4" NPT	2.10"	2" NPT	1.20"	9.10"	2.20"	23 GPM
SS-023P104/P300-X-X	1 1/4" NPT	2.50"	3" NPT	1.50"	6.70"	3.20"	23 GPM
SS-032P108/P300-X-X	1 1/2" NPT	2.50"	3" NPT	1.50"	8.70"	3.20"	32 GPM
SS-053P200/P300-X-X	2" NPT	3.06"	3" NPT	1.60"	8.80"	3.20"	53 GPM
SS-053P200/P400-X-X	2" NPT	4.13"	4" NPT	1.80"	7.70"	4.20"	53 GPM
SS-075P208/P400-X-X	2 1/2" NPT	4.13"	4" NPT	2.10"	9.70"	4.20"	75 GPM

How to Order:

SS-008P012/P104-1-0

Model Code
008P012/P104
014P100/P108
014P100/P300
014S020/P300
021S024/P300
023P104/P200
023P104/P300
032P108/P300
053P200/P300
053P200/P400
075P208/P400

Code	By-Pass Valve Setting
0	No By-Pass Valve
3	3 PSI
5	5 PSI

Code	Wire Cloth Mesh
1	100 Mesh (Std)
3	30 Mesh

magnaloy

Internally Mounted Tank Diffusers - evenly disperses return line fluid for heat dissipation and prevents fluid aeration.

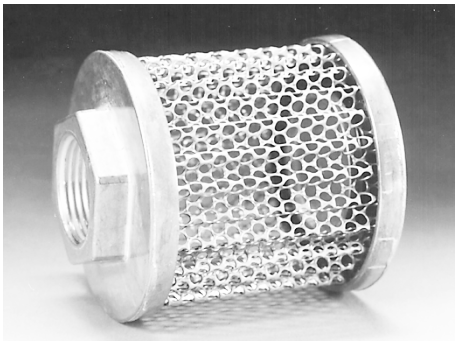

Features:

- Die cast aluminum end covers.
- End caps are designed to provide a positive interlock with epoxy bond to prevent leakage.
- Rated flow capacity at 15 ft/sec.
- Suitable with all petroleum base oils and fire retardant hydraulic fluids, coolants and lubricants.

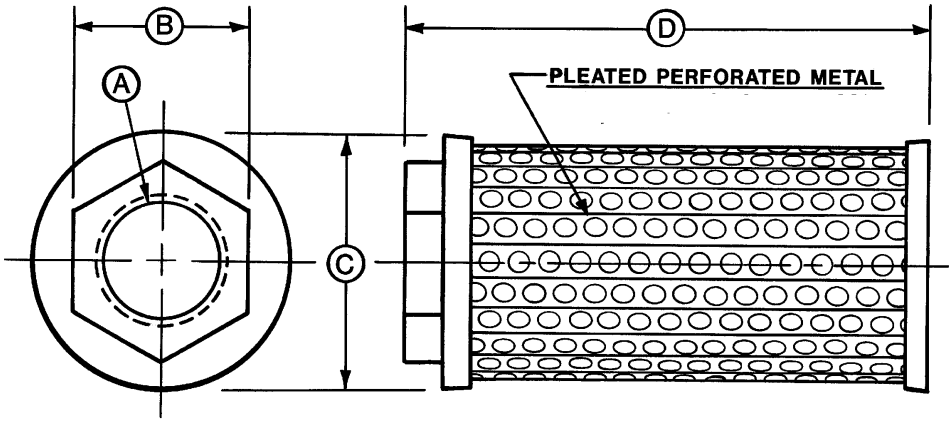

Part Number	A Outlet Port	B Wrench Flat	C Outside Diameter	D Overall Length	Rated Flow @ 15ft/sec	Area Ratio *
TD-025P012-D2	3/4" NPT	1.75"	3.20"	2.20"	25 GPM	20:1

* Ratio Area is the Ratio of the Perforated Metal Open Area to the Pipe Internal Area.

Spin-On Filter Head with ΔP Indicator Option:

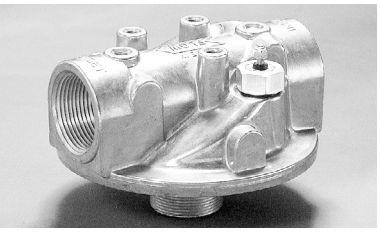

This product is obsolete and no longer available

For reference only

SFH-P104/00-0-0-00

Code	Port Size & Type	
	Inlet Port	Outlet Port
P104	1 1/4" NPT	1 1/4" NPT
S020	#20 SAE	#20 SAE
B104	1 1/4" BSPT	1 1/4" BSPT

Code	By-Pass Valve Setting
00	No By-Pass
03	3 PSI
05	5 PSI
15	15 PSI
25	25 PSI
50	50 PSI

Code	Gauge Port Location (see above)
0	No Gauge Port
1,2,3	Inlet Pressure (Return Line)
4,5,6	Outlet Vacuum (Suction Line)

Code	ΔP Indicator Setting
00	No Indicator
04	4 PSID
13	13 PSID
22	22 PSID
44	44 PSID

Code	Indicator Option	Indicator Series
O	No Indicator	None
V	Visual Indicator	DP03 Series
E	DC Electric Single Wire	DP06 Series
B	Vis/Elec w/DIN Conn.	DP05 Series

magnaloy

Application Data:

- Maximum Operating Pressure: 200 PSI All Models (***Warning:*** *80 PSI ΔP maximum without by-pass valve in Filter Head*).
- Operating Temperature: -65^0 F to 250^0 F.
- Fluid Compatability: Suitable for Petroleum based fluids only (consult factory for synthetic fluids.
- Gasket: Buna N Gasket Standard, fluorocarbon Gasket optional, consult factory.
- Filter Element Interchange: Consult factory or local distributor for information.
- Internal Combustion Engines: ***CAUTION!*** *Do Not Use SFE or SSFE Series filter elements on IC Engines.*
- Reference: 2/20/75 $Beta_x$ Rating - see Reference Section, page 65 for more information

  $Beta_x$ Rating of 2 = 50% Efficiency (Nominal Rating)
  $Beta_x$ Rating of 20 = 95% Efficiency
  $Beta_x$ Rating of 75 = 98.7% Efficiency (Absolute Rating)

Spin-On Filter Elements

Cellulose Media Series: For use with Magnaloy SHF Series Spin-On Filter Head

Part Number	Outside Diameter	Mounting Thread	Micron Rating	Beta Rating (see below)	Filter Media Area	Color Can/Imprint	Availability	Overall Length
CSFE-003-069	5.1”	1 1/2-16 UN	3 Micron	3/10/22	850 in^2	White/Green	Obsolete	6.9”
CSFE-010-069	5.1”	1 1/2-16 UN	10 Micron	9/22/24	950 in^2	White/Red	Ltd. Availability	6.9”
CSFE-025-069	5.1”	1 1/2-16 UN	25 Micron	29/46/54	950 in^2	White/Black	Ltd. Availability	6.9”
CSFE-141-069	5.1”	1 1/2-16 UN	141 Micron		200 in^2	White/Blue	Obsolete	6.9”
CSFE-003-109	5.1”	1 1/2-16 UN	3 Micron	3/10/22	1170 in^2	White/Green	Obsolete	10.9”
CSFE-003-109/WA	5.1”	1 1/2-16 UN	3 Micron	5/21/23	648 in^2	White/Orange	Obsolete	10.9”
CSFE-010-109	5.1”	1 1/2-16 UN	10 Micron	10/22/33	1710 in^2	White/Red	Obsolete	10.9”
CSFE-010-109/WA	5.1”	1 1/2-16 UN	10 Micron	8/25/30	648 in^2	White/Orange	Ltd. Availability	10.9”
CSFE-025-109	5.1”	1 1/2-16 UN	25 Micron	29/46/54	1710 in^2	White/Black	Obsolete	10.9”
CSFE-141-109	5.1”	1 1/2-16 UN	141 Micron		380 in^2	White/Blue	Ltd. Availability	10.9”

Synthetic Media Series: (Z-Glass Media) For use with Magnaloy SHF Series Spin-On Filter Head

Part Number	Outside Diameter	Mounting Thread	Micron Rating	Beta Rating (see below)	Filter Media Area	Color Can/Imprint	Availability	Overall Length
SSFE-003-067	5.1”	1 1/2-16 UN	3 Micron	2/3/4	680 in^2	White/Green	Obsolete	6.7”
SSFE-010-067	5.1”	1 1/2-16 UN	10 Micron	4/10/12	561 in^2	White/Red	Ltd. Availability	6.7”
SSFE-025-067	5.1”	1 1/2-16 UN	25 Micron	8/25/30	673 in^2	White/Black	Obsolete	6.7”
SSFE-003-107	5.1”	1 1/2-16 UN	3 Micron	2/3/4	1260 in^2	White/Green	Obsolete	10.7”
SSFE-010-107	5.1”	1 1/2-16 UN	10 Micron	4/10/12	1041 in^2	White/Red	Obsolete	10.7”
SSFE-025-107	5.1”	1 1/2-16 UN	25 Micron	8/25/30	1246 in^2	White/Black	Obsolete	10.7”

Integral Tank Breather Series

Features:

- Flow Rates up to 25 GPM (Return)
- Port Sizes: 1/2" NPT, 3/4" NPT
  #8 SAE, #12 SAE
  1/2" BSPT, 3/4" BSPT
- Maximum Operating Pressure of 100 PSI *(300 PSI Burst pressure) 25 PSI By-Pass included.*
- Operating Temperature Range: -15^0 F of 230^0 F.
- Head Material: Die Cast Aluminum Alloy
- Bowl/Cover Material: Nylon
- Breather: 10 Micron Foam (Standard)
- Suitable for Petroleum based fluids only (consult factory for synthetic fluids).

5

How to Order:

TTF-ITB-P008-0

Series: Integral Tank Breather

Code	Port Size
B012	3/4" BSP
S008	#8 SAE

Code	Dipstick Option
0	No Dipstick
D	w/Dipstick (9.84"length)

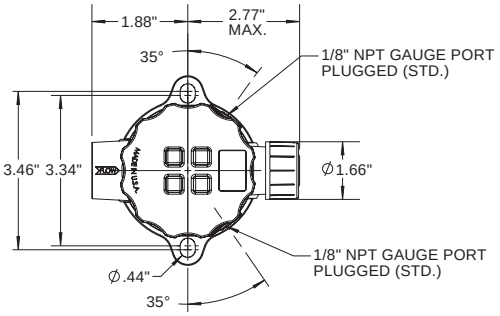

INSTALLATION LAYOUT

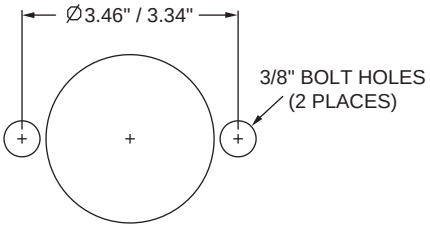

2.5" / 2.4" DIA.

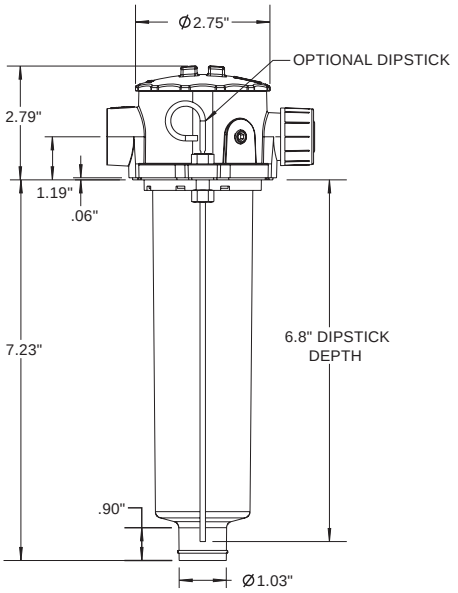

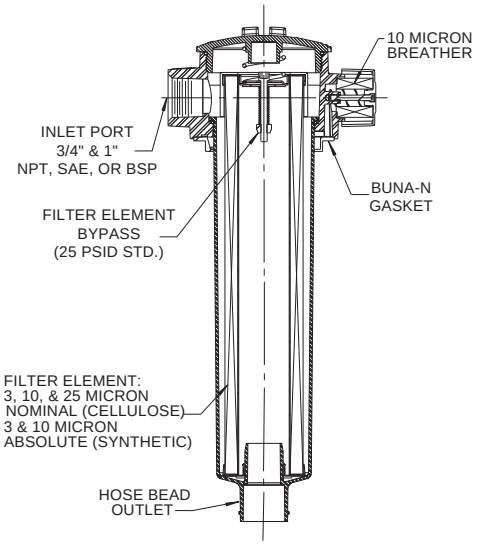

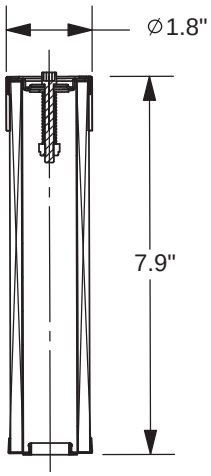

Average Pressure Drop through clean assembly with 150 SUS Oil at 105^0 F

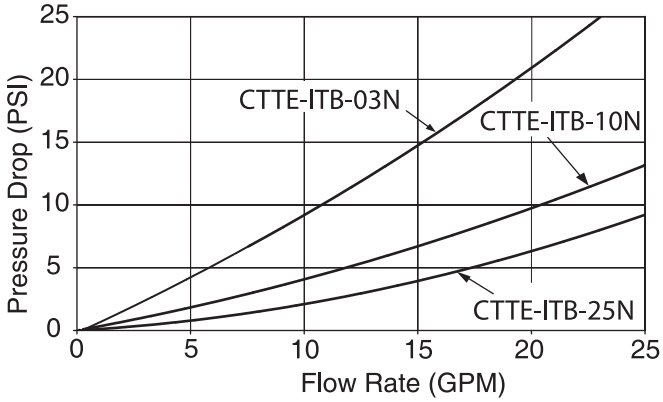

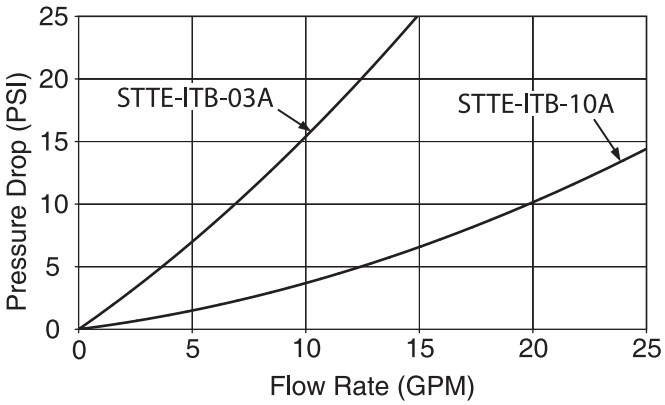

Tank Top Filter Elements

Cellulose Media Series: for use with Magnaloy Series TTF-ITB Tank Top Filter Head

Part Number	Micron Rating	Media Type	Filtration Rating
CTTE-ITB-03N	3 Nominal	Cellulose	$Beta_3 = 5.3$
CTTE-ITB-10N	10 Nominal	Cellulose	$Beta_{10} = 5.3$
CTTE-ITB-25N	25 Nominal	Cellulose	$Beta_{25} = 2.9$

Synthetic Media Series: (Z-Glass Media) for use with Magnaloy Series TTF-ITB Tank Top Filter Head

Part Number	Micron Rating	Media Type	Filtration Rating
STTE-ITB-03A	3 Absolute	Z Glass Synthetic	$Beta_3 = 200$
STTE-ITB-10A	10 Absolute	Z Glass Synthetic	$Beta_{10} = 200$

Suction/Return Line Series

Features:

- Flow Rates: ASR Housing(accepts "CTTE-ASR" and "SSTE-ASR" filter elements); 96 GPM (Return), 32 GPM (Suction)
  SSR Housing (accepts "CTTE-SSR" and "SSTE-SSR" filter elements); 71 GPM (Return), 24 GPM (Suction)
- Port Sizes: 1 1/4" NPT, 1 1/2" NPT; #20 SAE, #24 SAE; 1 1/4" BSPT
- Maximum Operating Pressure: 100 PSI (***Warning:*** *80 PSI ΔP maximum without by-pass valve in Filter Head*).
- Operating Temperature: up to 250^0 F.
- Material: Die Cast Aluminum Alloy
- Unitized cover and By-Pass Valve assembly - no parts to loose.
- Drop-in Element Bowl design for easy installation
- Patented element bowl hold down for suction applications.
- Radial seal design used in CTTE and STTE series filter elements
- O-Ring seal between filter housing and tank top
- Suitable for Petroleum based fluids only (consult factory for synthetic fluids).

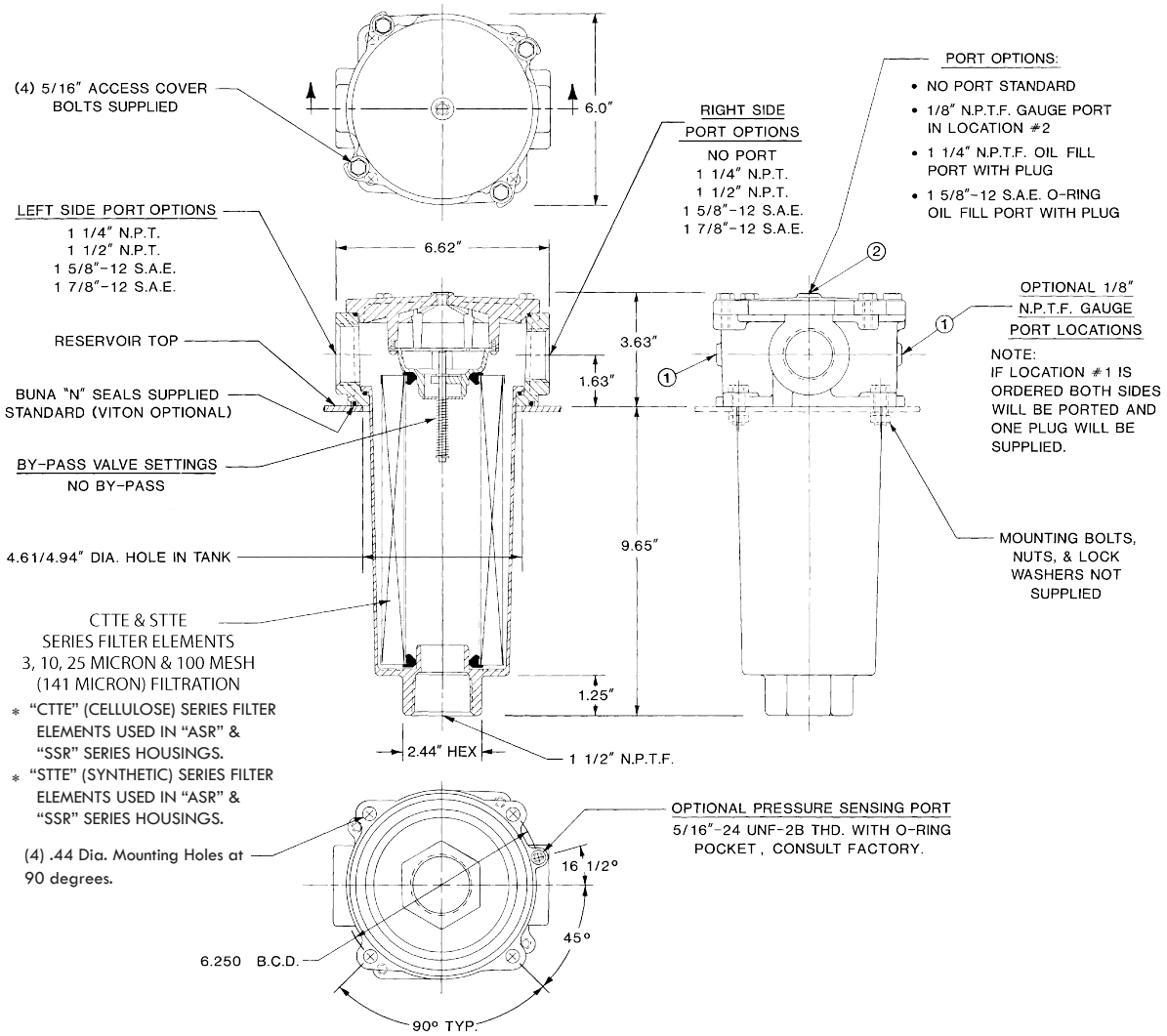

magnaloy

How to Order: **TTF-ASR-P104/P104-03-10-0**

Code	Material/Series
ASR	Aluminum Suction/Return

Code	Port Size & Type	
	Left Side Port	Right Side Port
P104/000	1 1/4" NPT	None
B104/000	1 1/4" BSPT	None
P104/P104	1 1/4" NPT	1 1/4" NPT
B104/B104	1 1/4" BSPT	1 1/4" BSPT
P108/000	1 1/2" NPT	None
P108/P104	1 1/2" NPT	1 1/4" NPT
P108/P108	1 1/2" NPT	1 1/2" NPT
S020/000	#20 SAE	None
S020/S020	#20 SAE	#20 SAE
S024/000	#24 SAE	None
S024/S024	#24 SAE	#24 SAE

Code	Check Valve Option
0	No Check Valve
V	with Check Valve

Code	Gauge & Oil Fill Port Location
00	No Gauge Port, No Oil Fill Port
10	Gauge Port in Location 1, No Oil Fill Port
12	Gauge Port in Location 1&2, No Oil Fill Port
1P	Gauge Port in Location 1, 1 1/4" NPT Fill Port with Plug
1S	Gauge Port in Location 1, #12 SAE Fill Port with Plug

Code	By-Pass Valve Option
00	No By-Pass
03	3 PSI By-Pass (Suction)
05	5 PSI By-Pass (Suction)
15	15 PSI By-Pass (Return)
25	25 PSI By-Pass (Return)
50	50 PSI By-Pass (Return)

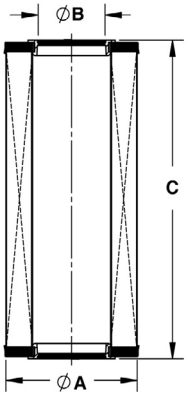

Magnetic Elements

Part Numbers
CTTE-ASR-100-092-OI/M
CTTE-ASR-100-092-IO/M

Three - 4" diameter x 5/8" thick ceramic magnets

Four - 100 mesh wire cloth filter sections

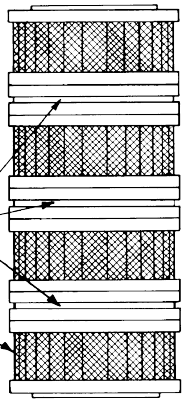

Cellulose Media Series: for use with Magnaloy Series TTF-ASR Tank Top Filter

Part Number	Filtration Rating	Filtration Rating	Filter Media Area	A OD	B ID	C Length	Flow Direction Thru Element
CTTE-ASR-003-092-BD	$Beta_3 = 5.3$	$Beta_{10} = 75$	1120 in^2	3.91"	1.96"	9.19"	Bi-Directional
CTTE-ASR-003-092-OI/WA**	$Beta_3 = 5.3$	$Beta_{10} = 75$	461 in^2	3.91"	1.96"	9.19"	Outside to Inside
CTTE-ASR-010-092-BD	$Beta_{10} = 5.3$	$Beta_{22} = 75$	1120 in^2	3.91"	1.96"	9.19"	Bi-Directional
CTTE-ASR-025-092-BD	$Beta_{25} = 2.9$	$Beta_{47} = 20$	1120 in^2	3.91"	1.96"	9.19"	Bi-Directional
CTTE-ASR-010-182-BD	$Beta_{10} = 5.3$	$Beta_{22} = 75$	2240 in^2	3.91"	1.96"	18.19"	Bi-Directional
CTTE-ASR-025-182-BD	$Beta_{25} = 2.9$	$Beta_{47} = 20$	2240 in^2	3.91"	1.96"	18.19"	Bi-Directional
CTTE-ASR-100-092-OI*	141 Micron		108 in^2	3.91"	1.96"	9.19"	Outside to Inside
CTTE-ASR-100-092-IO*	141 Micron		108 in^2	3.91"	1.96"	9.19"	Inside to Outside
CTTE-ASR-100-092-OI/M*	141 Micron		109 in^2	3.91"	1.96"	9.19"	Outside to Inside
CTTE-ASR-100-092-IO/M*	141 Micron		109 in^2	3.91"	1.96"	9.19"	Inside to Outside
CTTE-ASR-100-182-OI*	141 Micron		216 in^2	3.91"	1.96"	18.19"	Outside to Inside

Synthetic Media Series: for use with Magnaloy Series TTF-ASR Tank Top Filter

Part Number	Filtration Rating	Filtration Rating	Filter Media Area	A OD	B ID	C Length	Flow Direction Thru Element
STTE-ASR-003-092-OI	$Beta_3 > 200$		825 in^2	3.91"	1.96"	9.19"	Outside to Inside
STTE-ASR-010-092-OI	$Beta_{10} > 200$		825 in^2	3.91"	1.96"	9.19"	Outside to Inside
STTE-ASR-003-182-OI	$Beta_3 > 200$		1650 in^2	3.91"	1.96"	18.19"	Outside to Inside
STTE-ASR-010-182-OI	$Beta_{10} > 200$		1650 in^2	3.91"	1.96"	18.19"	Outside to Inside

Note:

* 100 Mesh Stainless Steel Wire Cloth is standard for 141 Micron Elements, 30, 60 & 200 optional - consult factory

** Filter Elements CTTE-ASR-409-03-IO/WA & CTTE-ASR-409-10-OI/WA contain Aqua-Zorb (water absorbing) filter media. ASR Elements come standard with a Buna-N radial seal, Fluorocarbon optional -consult factory

Average Pressure Drop through clean filter with 150 SUS Oil at 105^0 F

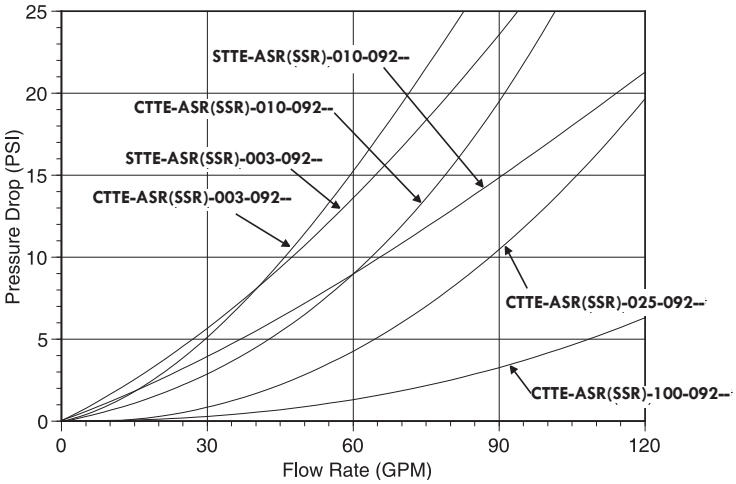

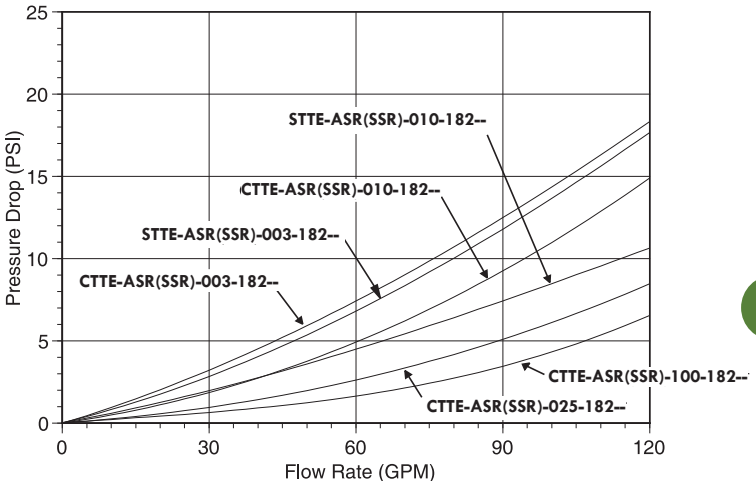

Liquid Filled Pressure Gauges - high quality construction, dampened movement, accurate readings

Bottom Stem Series

Features:

- Glycerine Filled (available Dry - consult factory)
- Built-in snubber dampens the effects of pressure pulsations
- Phosphor Bronze Bourdon Tube
- Plastic Lens Standard (Glass Available)
- Stainless Steel Case and Bezel (Brass Connection and Internal Parts)
- Accuracy: 2 1/2" Dial = ANSI GRADE A, 4" Dial = ANSI GRADE 1A
- Temperature Range: 30^0 F to 160^0 F Filled (-30^0 F to 180^0 F Dry)
- Dual Scale Readings in PSI and Bar (x100 = kPa)

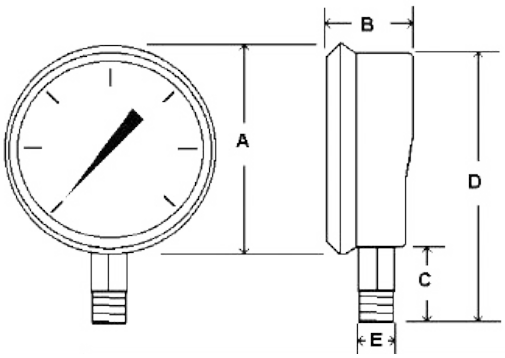

Code	Dial Range*	Major Increments*	Minor Increments*
03C	30/0/30 "Hg/PSI Compound	10 "Hg/PSI	1 "Hg/PSI
003	0/30 PSI	5 PSI	0.5 PSI
006	0/60 PSI	10 PSI	1 PSI
010	0/100 PSI	20 PSI	2 PSI
016	0/160 PSI	20 PSI	2 PSI
030	0/300 PSI	50 PSI	5 PSI
050	0/500 PSI	100 PSI	10 PSI
060	0/600 PSI	100 PSI	10 PSI
100	0/1000 PSI	200 PSI	20 PSI
150	0/1500 PSI	200 PSI	20 PSI
200	0/2000 PSI	400 PSI	50 PSI
300	0/3000 PSI	500 PSI	50 PSI
400	0/4000 PSI	500 PSI	50 PSI
500	0/5000 PSI	1000 PSI	100 PSI
600	0/6000 PSI	2000 PSI	200 PSI
10K	0/10,000 PSI	2000 PSI	200 PSI

Size	2 1/2" Dial		4" Dial	
Units	Inch	mm	Inch	mm
A	2.80	71	4.32	110
B	1.28	33	1.63	42
C	1.07	27	1.25	32
D	3.55	90	5.57	141
E	1/4" NPT		1/4" NPT	
			1/2" NPT	

* Compound Range reads 30 "Hg Vacuum to 30 PSI Pressure with the Major Dial Increments reading 10 "Hg or 10 PSI and the Minor Dial Increments reading 1 "Hg or 1 PSI. All other Gauges read in PSI only.

magnaloy

Rear Stem Series

Features:

- See Bottom Stem Series - same with exception below
- Accuracy: 2 1/2" Dial = 1.5% of Full Scale, 4" Dial = 1% of Full Scale

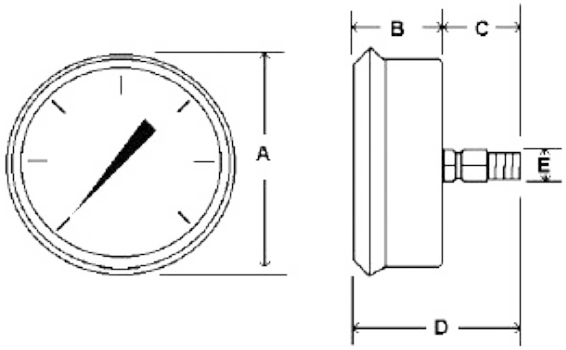

Code	Dial Range*	Major Increments*	Minor Increments*
03C	30/0/30 "Hg/PSI Compound	10 "Hg/PSI	1 "Hg/PSI
003	0/30 PSI	5 PSI	0.5 PSI
006	0/60 PSI	10 PSI	1 PSI
010	0/100 PSI	20 PSI	2 PSI
016	0/160 PSI	20 PSI	2 PSI
030	0/300 PSI	50 PSI	5 PSI
060	0/600 PSI	100 PSI	10 PSI
100	0/1000 PSI	200 PSI	20 PSI
150	0/1500 PSI	200 PSI	20 PSI
200	0/2000 PSI	400 PSI	50 PSI
300	0/3000 PSI	500 PSI	50 PSI
500	0/5000 PSI	1000 PSI	100 PSI
10K	0/10,000 PSI	1000 PSI	100 PSI

Size	2 1/2" Dial		4" Dial	
Units	Inch	mm	Inch	mm
A	2.80	71	4.32	110
B	1.28	33	1.63	42
C	1.18	30	1.14	29
D	2.46	63	2.77	71
E	1/4" NPTF		1/4" NPT	

* Compound Range reads 30 "Hg Vacuum to 30 PSI Pressure with the Major Dial Increments reading 10 "Hg or 10 PSI and the Minor Dial Increments reading 1 "Hg or 1 PSI. All other Gauges read in PSI only.

How to Order: **LFPG-400-003 04N/BS**

Code	Dial Face Diameter
208	2 1/2 inch
400	4 inch

Code	Dial Range
See Tables Above	

Code	Mounting Type
BS	Bottom Stem
RS	Rear Stem

Code	Fitting Thread
04N	1/4" NPT
08N	1/2" NPT *

* Available in Bottom Stem Series Only with 4" Dial

A High Quality, Push-to-Read Device that Isolates and Protects your Gauge. You can Read up to Six Port Signals from a Single Gauge.

Magnaloy Gauge Isolators are manufactured from high quality steel hexagonal bar stock and machined to exact tolerances. Pressure is supplied to the gauge only when requested, by pushing the knob. This prevents gauge failure caused by continuous exposure of the gauge to damaging pressure surges and helps extend the life of the gauge and maintain its accuracy. This design provides simple mounting options and an attractive, compact package.

Single Position Gauge Isolator Specifications:

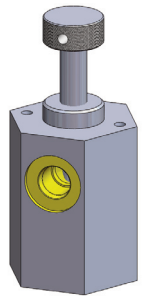

- Push to read.
- Operating Temperature -30^0 F to 240^0 F.
- 5,000 PSI working pressure.
- Viton Seals.
- 1/4" NPT or #4 SAE O-Ring ports.
- Panel or in-line mounting (maximum panel thickness - 5/16")

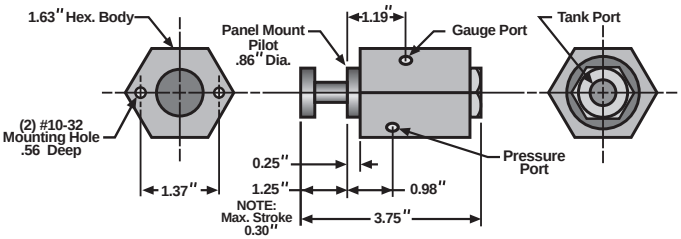

Six Position Gauge Isolator Specifications:

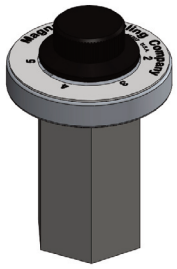

- Turn to select position, push to read.
- Operating Temperature -30^0 F to 240^0 F.
- 5,000 PSI working pressure.
- Viton Seals.
- #4 SAE O-Ring ports.
- Panel mounting.
- Read up to 6 pressure signals from a single gauge.

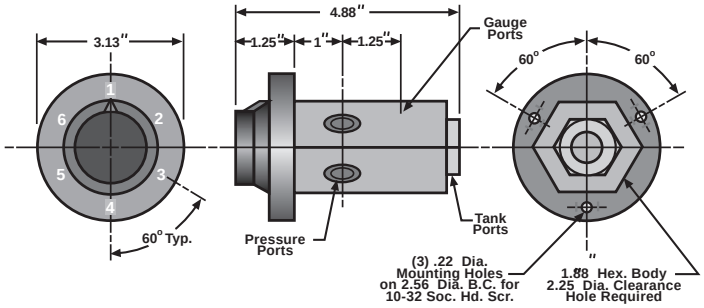

Ordering Specifications:

Part Number	Positions	Port Type
GI-01-SAE	Single	#4 SAE O-Ring
GI-01-NPT	Single	1/4" NPT
GI-06-SAE	Six	#4 SAE O-Ring

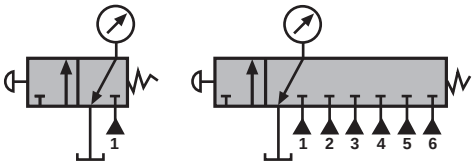

magnaloy

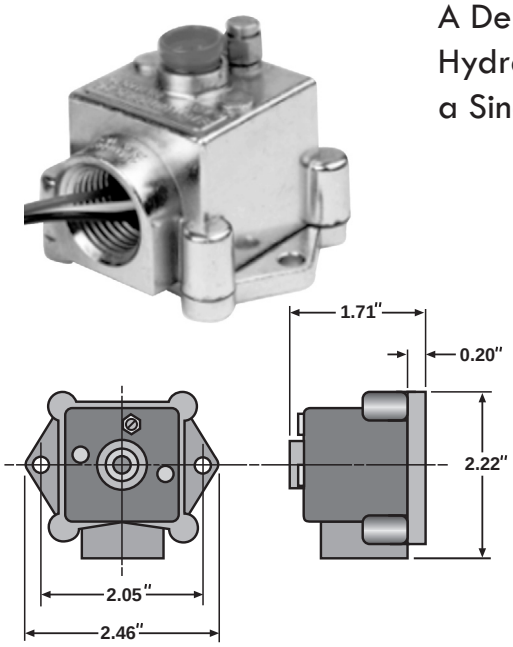

A Dependable Pressure-Sensing Device that Converts a set Hydraulic Pressure to an Electrical Signal - up to TWO Signals in a Single Switch.

Technical Specifications

Operating Characteristics:

- Adjustable Range: 300 PSI to 2,600 PSI
- Pressure Reset: 125 PSI to 300 PSI, nominal
- Rated Pressure 4,000 PSI
- Burst Pressure: 12,000 PSI
- Temperature Rating: -20^0 F to 160^0 F
- Repeatability: 2% of set pressure

Electrical Characteristics:

- U.L. Listed Switching Elements
- Rating: 4 amps, 250 VAC / 3 amps, 12 VDC

Options:

- Second Independently adjustable switch
- Factory pre-set to specified pressures
- 200 PSI to 1,250 PSI range (L) (125 PSI to 200 PSI reset)
- 500 PSI to 4,000 PSI range (H), High cycle unit (300 PSI to 450 PSI reset)

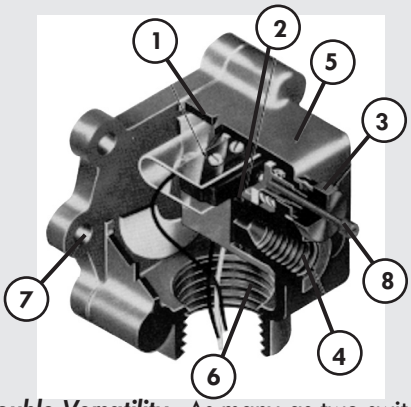

1. ***Double Versatility.*** As many as two switching elements can be independently adjusted over the full PS-400 pressure range.
2. ***Fluid Compatibility.*** Viton seal with Teflon back-up ring compatible with most hydraulic fluids.
3. ***Easy Pressure Adjustment.*** External adjustment nut is easily accessible for quick pressure reset.
4. ***Save Plumbing Cost.*** Single pressure tap (1/8" NPT female) serves both piston mounted microswitches.
5. ***Oil Tight Case (NEMA 12)***
6. ***Standard Conduit Connection.*** 1/2" NPT female.
7. ***Easy Installation.*** Two mounting holes provided for No. 10 screws.
8. ***Positive Locking.*** Pressure Adjusting Screw.

Pressure Switch Wiring Instructions:

	Switch #1	Switch #2
Normally Open	Red	Red w/1 Yellow Stripe
Common	White	White w/1 Yellow Stripe
Normally Closed	Black	Black w/1 Yellow Stripe

Pressure Switch is tested but NOT pre-set.
NOTE: factory will pre-set pressure for a nominal charge
Important! Lock nut torque range: 6 - 8 in lbs.

How to order:

- PS-400-115 Single Switch Assembly
  NEMA 12 Enclosure, Viton Seals, 300 - 2,600 PSI Range.
- PS-400-215 Double Switch Assembly
  NEMA 12 Enclosure, Viton Seals, 300 - 2,600 PSI Range.

To specify pre-set pressure(s), note setting(s) after part number.

For optional operating ranges specify (L) or (H) after part number.

Magnaloy • 170 N Industrial Hwy. Alpena, MI 49707 • 989 356-2186
www.magnaloy.com A Division of Douville Johnston Corporation

For Continuous reading of Fluid Level and Temperature

Standard Line - Liquid Column Series

Features:

- UV Resistant Transparent Dupont Grilamid Case
- All-Around Visibility of the Fluid Level
- Buna-N O-ring Seals
- Zinc Plated Bolts
- Available with Optional Cast Aluminum Cover to Provide additional breakage protection
- Includes Thermometer with Blue Fluid for easy readings
- 212^0 F Maximum Temperature Rating
- For use with Petroleum and Water Base Hydraulic Fluids, consult factory for other fluids

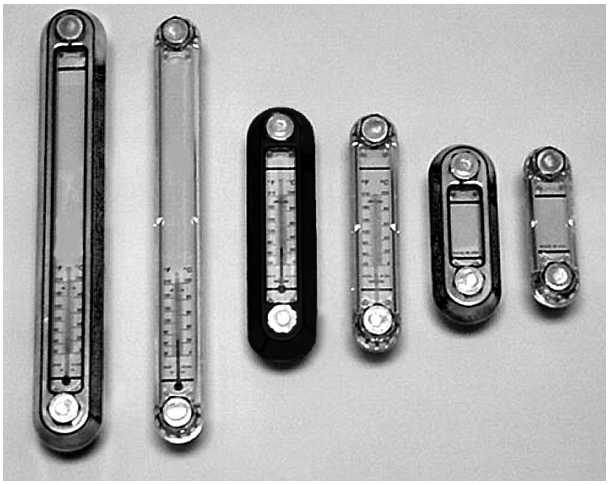

W/Out Cover

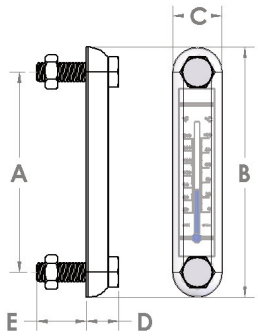

With Cover

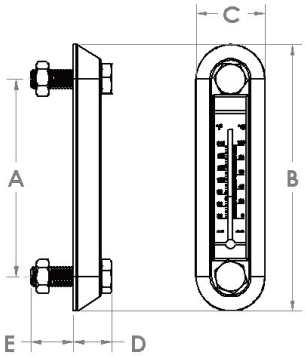

Part Number	Description	A	B	C	D	E
SLLG-03T	Std 3” w/temp	3.00”	4.22”	1.22”	0.81”	1.16”
SLLG-03T-C	Std 3” w/temp & Cover	3.00”	4.75”	1.75”	0.93”	0.82”
SLLG-05T	Std 5” w/temp	5.00”	6.22”	1.22”	0.81”	1.16”
SLLG-05T-C	Std 5” w/temp & Cover	5.00”	6.75”	1.75”	0.93”	0.82”
SLLG-10T	Std 10” w/temp	10.00”	11.22”	1.22”	0.81”	1.16”
SLLG-10T-C	Std 10” w/temp & Cover	10.00”	11.75”	1.75”	0.93”	0.82”

Premium Line - Liquid Column Series

Features:

- Borosilicate sight glass compatible with all hydraulic fluids and will not discolor
- 20 PSI maximum working pressure at 250^0 F
- May be front mounted by threaded tank holes or rear mounted with provided nuts
- Mounting bolts provide 1/16” alignment adjustment to facilitate installation
- Low profile body offers wide sight opening for visibility
- Machined from solid Aluminum bar stock
- Includes internal thermometer - external thermometer available - consult factory

Premium LLG Line

Warning: Not recommended for use with acidic fluids, caustic fluids, volatile fluids, water and steam

magnaloy

Premium Line (continued)

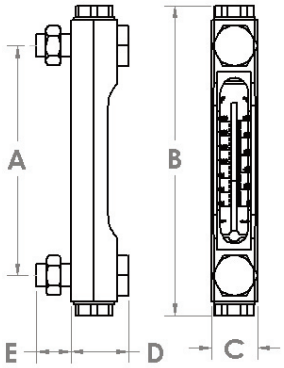

Part Number	Description	A	B	C	D	E
PLLG-03T	Premium 3” w/temp	3.00”	4.63”	1.00”	1.23”	0.75”
PLLG-05T	Premium 5” w/temp	5.00”	6.63”	1.00”	1.23”	0.75”
PLLG-10T	Premium 10” w/temp	10.00”	11.63”	1.00”	1.23”	0.75”

How to Order: **SLLG-03T-C-2**

Code	Series
SLLG	Standard Liquid Level Gauge
PLLG	Premium Liquid Level Gauge

Code	Bolt Center Distance
03	3”
05	5”
10	10”

Code	Mounting Bolt Option
Blank	1/2-13 UNC (1)
2	M12 x 1.75 Metric (2)

Code	Cover (Guard) Option
Blank	No Cover
C	with Cover (3)

Notes:

1 - 1/2-20 UNF with Premium Line (PLLG)
2 - Metric Not Available with Premium Line (PLLG)
3 - Premium Line design incorporates integral gauge guard (PLLG)

Sight Glass Series

Features:

- Clear Nylon Fluid Level sight glass with Steel Collar for weld attachment to reservoir
- 400 PSI maximum working pressure
- Temperature Range: -65° F to 150° F for pressure applications
- For use with Petroleum Base and Water Base Hydraulic Fluids

Order Part Number: SLSG-100

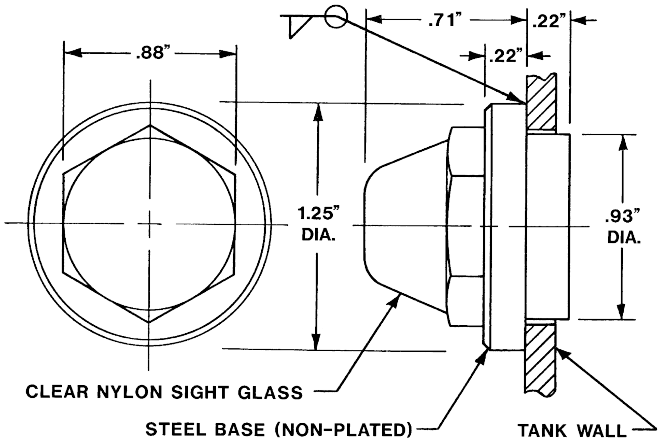

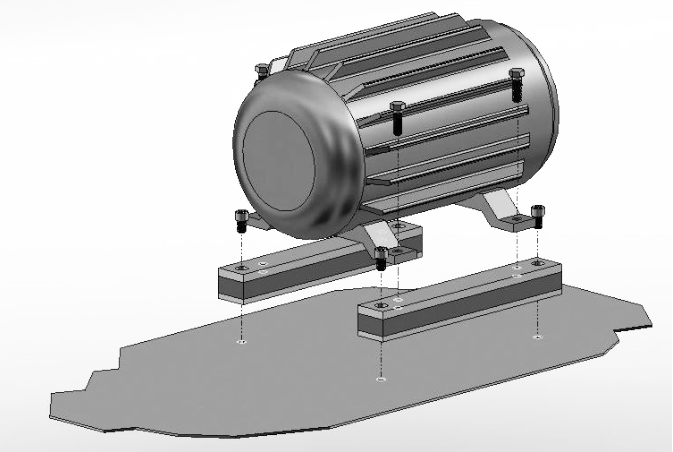

Features:

- Reduces noise and vibrations
- Available to accommodate NEMA frame sizes 056C thru 405TC
- Strong vulcanized rubber-to-metal bond results in no metal-to-metal contact
- Bolt down or weld in place for easy installation directly to tank top
- Weld pads are available for simple safe mounting option
- Supplied in sets of two (2) bars for each motor

NEMA Bolt Down Series:

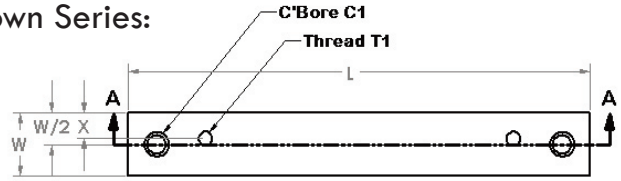

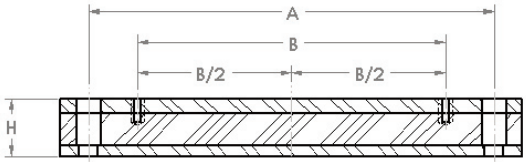

SECTION A-A

Part Number	Motor Frame	Dampening Bar Dimensions (inches)							
		L	W	H	A	B	X	C1 for	T1
MDB056-B	056C	7.25	1.97	1.57	5.75	3.0	.875	1/2-13	5/16-18
MDB143-B	143TC	7.75	1.97	1.57	6.25	4.0	.812	1/2-13	5/16-18
MDB145-B	145TC	8.75	1.97	1.57	7.25	5.0	.812	1/2-13	5/16-18
MDB182-B	182TC	8.75	1.97	1.57	7.25	4.5	.938	1/2-13	3/8-16
MDB184-B	184TC	9.75	1.97	1.57	8.25	5.5	.938	1/2-13	3/8-16
MDB213-B	213TC	10.0	1.97	1.57	8.50	5.5	.938	1/2-13	3/8-16
MDB215-B	215TC	11.5	1.97	1.57	10.0	7.0	.938	1/2-13	3/8-16
MDB254-B	254TC	13.0	1.97	1.77	11.5	8.25	.938	1/2-13	1/2-13
MDB256-B	256TC	14.75	1.97	1.77	13.25	10.0	.938	1/2-13	1/2-13
MDB284-B	284TC/TSC	14.5	2.76	2.36	12.75	9.5	1.125	5/8-11	1/2-13
MDB286-B	286TC/TSC	16.0	2.76	2.36	14.25	11.0	1.125	5/8-11	1/2-13
MDB324-B	324TC/TSC	16.0	3.15	2.36	14.0	10.5	1.562	3/4-10	5/8-11
MDB326-B	326TC/TSC	17.5	3.15	2.36	15.5	12.0	1.562	3/4-10	5/8-11
MDB364-B	364TC/TSC	17.0	3.15	2.36	15.0	11.25	1.562	3/4-10	5/8-11
MDB365-B	365TC/TSC	18.0	3.15	2.36	16.0	12.25	1.562	3/4-10	5/8-11
MDB404-B	404TC/TSC	19.5	3.94	2.36	17.25	12.25	2.0	1-8	3/4-10
MDB405-B	405TC/TSC	21.0	3.94	2.36	18.75	13.75	2.0	1-8	3/4-10
MDB444-B	444TC/TSC	23.0	4.72	2.36	20.75	14.5	2.375	1-8	3/4-10
MDB445-B	445TC/TSC	26.0	4.72	2.36	23.75	16.5	2.375	1-8	3/4-10
MDB447-B	447TC/TSC	29.5	4.72	2.36	26.75	20.0	2.375	1-8	3/4-10
MDB449-B	449TC/TSC	34.5	4.72	2.36	31.75	25.0	2.375	1-8	3/4-10

IEC Bolt Down Series:

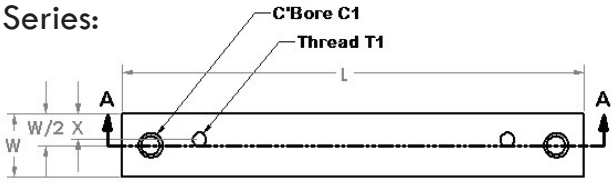

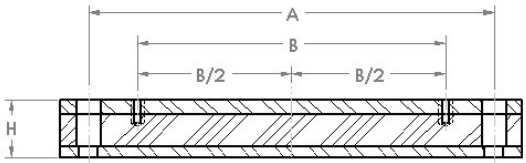

SECTION A-A

Part Number	Motor Size	Dampening Bar Dimensions (mm)							
		L	W	H	A	B	X	C1 for	T1
MDB071-B	71	196	50	40	156	90	21	1/2-13	M6
MDB080-B	80	176	50	40	146	100	22	1/2-13	M8
MDB090S-B	90 S	196	50	40	156	100	24.5	1/2-13	M8
MDB090L-B	90 L	240	50	40	205	125	24	1/2-13	M8
MDB100L-B	100 L	240	50	40	205	140	22	1/2-13	M10
MDB112M-B	112 M	240	50	40	205	140	22	1/2-13	M10
MDB132S-B	132 S	280	50	45	245	140	20	1/2-13	M10
MDB132M-B	132 M	280	50	45	245	178	20	1/2-13	M10
MDB160M-B	160 M	340	70	60	300	210	28	5/8-11	M12
MDB160L-B	160 L	416	70	60	370	254	28	5/8-11	M12
MDB180M-B	180 M	416	70	60	370	241	35	5/8-11	M12
MDB180L-B	180 L	446	70	60	400	279	35	5/8-11	M12
MDB200L-B	200 L	492	70	60	430	305	35	3/4-10	M16
MDB225S-B	225 S	492	70	60	430	286	35	3/4-10	M16
MDB225M-B	225 M	492	70	60	445	311	35	3/4-10	M16
MDB250M-B	250 M	492	100	60	445	349	50	3/4-10	M20
MDB280S-B	280 S	614	100	60	570	368	50	3/4-10	M20
MDB280M-B	280 M	614	100	60	570	419	50	3/4-10	M20
MDB315S-B	315 S	614	120	60	570	406	60	3/4-10	M24
MDB315M-B	315 M	614	120	60	570	457	60	3/4-10	M24
MDB315L-B	315 L	704	120	60	660	508	60	3/4-10	M24

NEMA Weld Series:

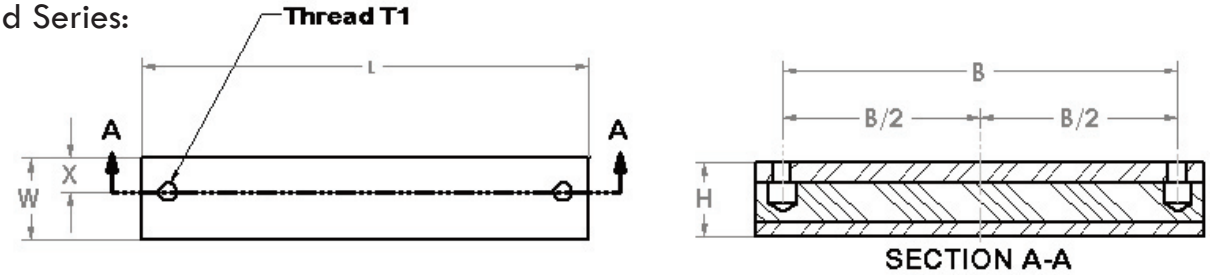

Part Number	Motor Frame	Dampening Bar Dimensions (inches)					
		L	W	H	B	X	T1
MDB056-W	056C	4.75	1.97	1.57	3.0	.875	5/16-18
MDB143-W	143TC	5.50	1.97	1.57	4.0	.812	5/16-18
MDB145-W	145TC	6.50	1.97	1.57	5.0	.812	5/16-18
MDB182-W	182TC	6.0	1.97	1.57	4.5	.938	3/8-16
MDB184-W	184TC	7.0	1.97	1.57	5.5	.938	3/8-16
MDB213-W	213TC	7.75	1.97	1.57	5.5	.938	3/8-16
MDB215-W	215TC	9.0	1.97	1.57	7.0	.938	3/8-16
MDB254-W	254TC	10.5	1.97	1.77	8.25	.938	1/2-13
MDB256-W	256TC	12.25	1.97	1.77	10.0	.938	1/2-13
MDB284W	284TC/TSC	12.0	2.76	2.36	9.5	1.125	1/2-13
MDB286-W	286TC/TSC	13.25	2.76	2.36	11.0	1.125	1/2-13
MDB324-W	324TC/TSC	12.5	3.15	2.36	10.5	1.562	5/8-11
MDB326-W	326TC/TSC	14	3.15	2.36	12.0	1.562	5/8-11
MDB364-W	364TC/TSC	13.5	3.15	2.36	11.25	1.562	5/8-11
MDB365-W	365TC/TSC	14.5	3.15	2.36	12.25	1.562	5/8-11
MDB404-W	404TC/TSC	15.5	3.94	2.36	12.25	2.0	3/4-10
MDB405-W	405TC/TSC	17.0	3.94	2.36	13.75	2.0	3/4-10
MDB444-W	444TC/TSC	19.5	4.72	2.36	14.5	2.375	3/4-10
MDB445-W	445TC/TSC	21.0	4.72	2.36	16.5	2.375	3/4-10
MDB447-W	447TC/TSC	24.5	4.72	2.36	20.0	2.375	3/4-10
MDB449-W	449TC/TSC	31.0	4.72	2.36	25.0	2.375	3/4-10

CAUTION !

Welding Directly to the Magnaloy Motor Dampening Bar can cause damage to the metal-to-rubber bond resulting in premature failure. Welding should be limited to the ends only (across the "W" dimension) to prevent damage to the rubber vulcanization by the heat generated during the welding process. Extreme care should be exercised whenever welding to assemblies containing vulcanized rubber. Bond Separation will occur if the metal/rubber surface interface reaches a temperature above 500 ^{0}F.

Magnaloy offers a solution to this situation - the **Magnaloy Weld Pad Kit.**

See page 34 for details.

IEC Weld Series:

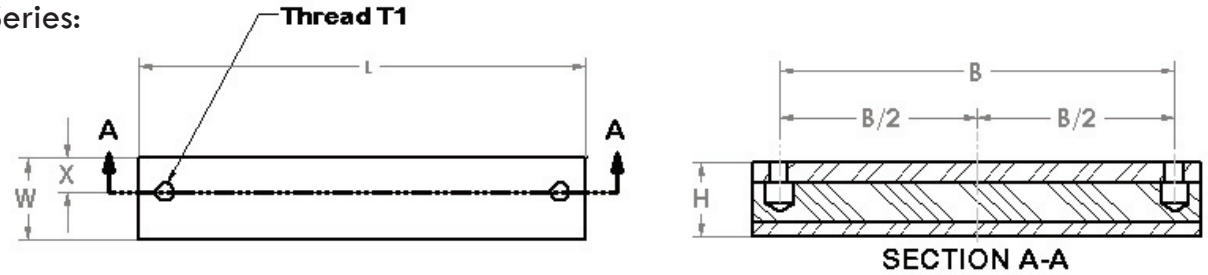

Part Number	Motor Size	Dampening Bar Dimensions (mm)					
		L	W	H	B	X	T1
MDB071-W	71	130	50	40	90	21	M6
MDB080-W	80	140	50	40	100	22	M8
MDB090S-W	90 S	140	50	40	100	24.5	M8
MDB090L-W	90 L	165	50	40	125	24	M8
MDB100L-W	100 L	180	50	40	140	22	M10
MDB112M-W	112 M	180	50	40	140	22	M10
MDB132S-W	132 S	197	50	45	140	20	M10
MDB132M-W	132 M	229	50	45	178	20	M10
MDB160M-W	160 M	267	70	60	210	28	M12
MDB160L-W	160 L	311	70	60	254	28	M12
MDB180M-W	180 M	305	70	60	241	35	M12
MDB180L-W	180 L	337	70	60	279	35	M12
MDB200L-W	200 L	357	70	60	305	35	M16
MDB225S-W	225 S	343	70	60	286	35	M16
MDB225M-W	225 M	343	70	60	311	35	M16
MDB250M-W	250 M	394	100	60	349	50	M20
MDB280S-W	280 S	495	100	60	368	50	M20
MDB280M-W	280 M	495	100	60	419	50	M20
MDB315S-W	315 S	481	120	60	406	60	M24
MDB315M-B	315 M	532	120	60	457	60	M24
MDB315L-B	315 L	583	120	60	508	60	M24

NEMA & IEC Weld Pad Kit:

Features:

- Allows simple bolt down installation and design flexibility without drilling and tapping the reservoir surface.
- Eliminates the possibility of heat damage to rubber vulcanization caused by welding directly on the dampening bar.
- Available in sizes to accommodate all Magnaloy Motor Dampening Bars.
- Provides additional motor height to give added design flexibility and plumbing options.
- Supplied in sets of four (4) pads per kit (one set for each motor).

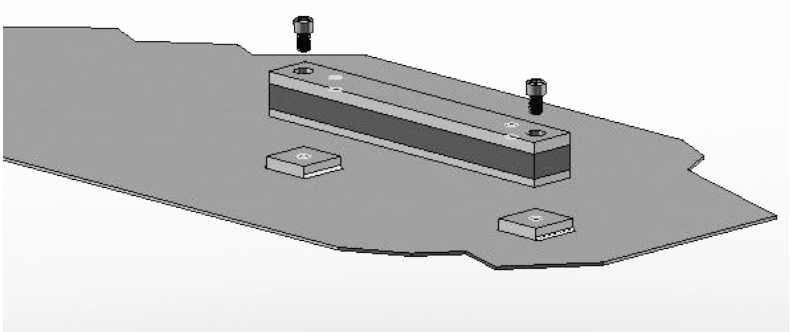

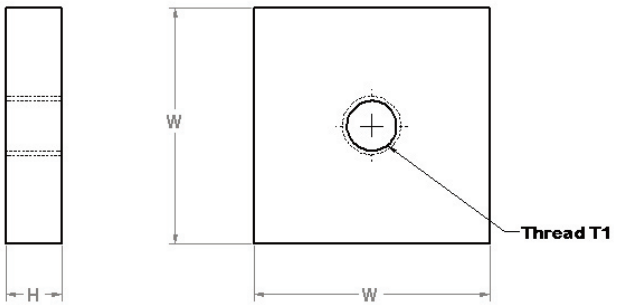

Part Number	Fits Motor Frames/Sizes	Weld Pad Dimensions (inches)		
		W	H	T1
MWP056-256	056C thru 256TC	2.0	.50	1/2-13 UNC
MWP284-286	284TC/TSC thru 286TC/TSC	2.75	.50	5/8-11 UNC
MWP324-365	324TC/TSC thru 365TC/TSC	2.75	.75	3/4-10 UNC
MWP404-405	404TC/TSC thru 405TC/TSC	4.0	.75	1-8 UNC
MWP444-449	444TC/TSC thru 449TC/TSC	4.75	.75	1-8 UNC
MWP071-132M	IEC 071 thru IEC132M	2.0	.50	1/2-13 UNC
MWP160M-180L	IEC 160M thru IEC 180L	2.75	.50	5/8-11 UNC
MWP200L-315L	IEC 200L thru IEC 315L	2.75	.75	3/4-10 UNC

Motor Base Plate:

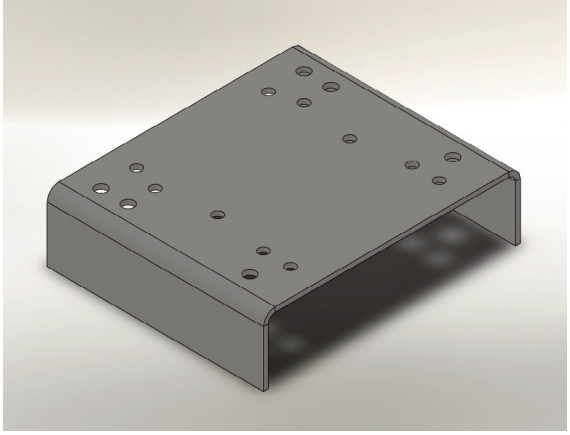

Features:

- Simplifies motor mounting to Reservoir top by eliminates drilling and threading on Reservoir.
- Base Plate welds directly on the Reservoir top or Porch on "L" Tanks
- Available in sizes to accommodate NEMA 056C through 326TC/TSC frame sizes.
- Provides additional motor height to give added design flexibility and plumbing options.
- Each size accomodates several NEMA frame sizes.
- Made from heavy gauge (7ga on 056 size and 1/4" on 213 thru 326 sizes) sheet steel to provide strength and rigidity.

MBP-056/184 - Fits NEMA frame motors 056C thru 184TC

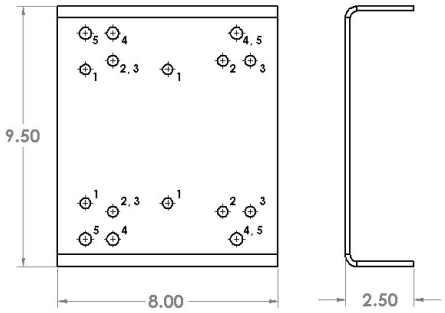

Feature Number	Motor Frame	Hole Diameter	Number of Holes
1	056C	0.375	4
2	143TC	0.375	4
3	145TC	0.375	4
4	182TC	0.437	4
5	184TC	0.437	4

MBP-213/256 - Fits NEMA frame motors 213TC thru 256TC

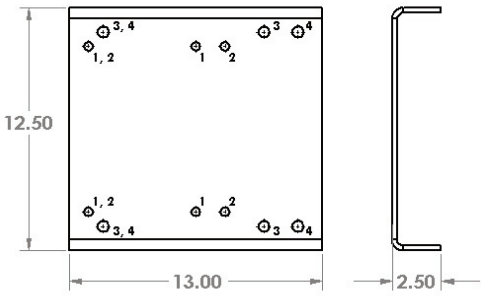

Feature Number	Motor Frame	Hole Diameter	Number of Holes
1	213TC	0.437	4
2	215TC	0.437	4
3	254TC	0.562	4
4	256TC	0.562	4

MBP-284/326 - Fits NEMA frame motors 284TC/TSC thru 326TC/TSC

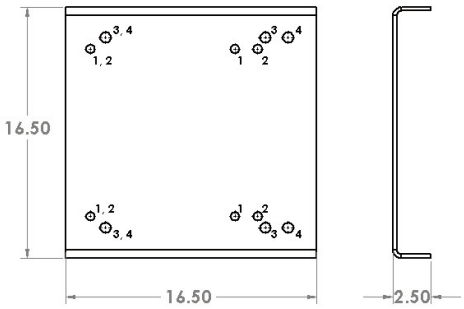

Feature Number	Motor Frame	Hole Diameter	Number of Holes
1	284TC/TSC	0.437	4
2	286TC/TSC	0.437	4
3	324TC/TSC	0.562	4
4	326TC/TSC	0.562	4

A Cost Saving, Easy to Identify, Inventory of Commonly used Buna-N or Viton O-Rings. Sized for Vickers Industrial Valves.

How to Order:

ORK-12000 **Buna-N O-Ring Kit**

ORK-12001 **Vitron O-Ring Kit**

Each kit contains the following size and quantities of either Buna-N or Viton O-Rings:

Plug Number	Quantity	Buna-N Vicker's Part No.	Viton Vicker's Part No.
1	34	154000	262326
2	34	154001	262327
3	34	154002	262328
4	32	154004	262330
5	32	154005	262331
6	32	154006	262332
7	18	154139	262333
8	36	199811	262334
9	18	173792	262335
10	18	153950	262336
11	18	154942	262337
12	18	157515	262338
13	18	154142	262339
14	18	166360	262340
15	18	174619	262341
16	18	153999	262920
17	18	187000	262344
18	17	154137	262348
19	13	154012	262354
20	13	154130	262498

Plug Number	Quantity	Buna-N Vicker's Part No.	Viton Vicker's Part No.
21	13	199812	262356
22	12	199813	262361
23	12	157143	261818
24	12	199817	262369
25	9	154014	262389
26	9	154015	262390
27	9	154016	262391
28	9	154017	262392
29	9	154018	262393
30	18	154019	262394
31	9	154020	262395
32	9	154023	262398
33	9	154024	262399
34	9	154026	262401
35	16	154077	262402
36	8	154078	262403
37	8	154079	262404
38	8	154084	262409
39	17	154128	262496
40	15	154129	262497

SECTION 6

MAGNALOY ROD END ALIGNMENT COUPLERS

NOTE: *Due to Magnaloy's policy of continuous improvement, specifications are subject to change without notice. Check with the factory or our Web Site at www.magnaloy.com for the latest information.*

- Total of 10^0 Spherical Movement in push or pull.
- Total of 1/8" Lateral Movement.
- Manufactured from high tensile and hardened materials.
- Lubricated at factory.

Time and Money Saving Features

- Eliminates need for custom designing.
- Simplifies cylinder installation.
- Increases design tolerances.
- Cuts cylinder repairs.
- Increases cylinder life - easier on seals, wiper, bearing surfaces and cushion parts.
- Compensates for machinery deflection and cuts bearing wear from side loads and binding.
- Allows equally effective angular or lateral displacement in either direction, push or pull.
- Immediated delivery from stock on thread sizes thru 1 1/2".
- Adjusted at factory, no clearance of end play.
- Same load rating push or pull.
- Internal thread mates with standard style No. 2 cylinder piston rods; external with style No. 3.
- Available in metric threads, consult factory.
- Available in Stainless Steel, consult factory.

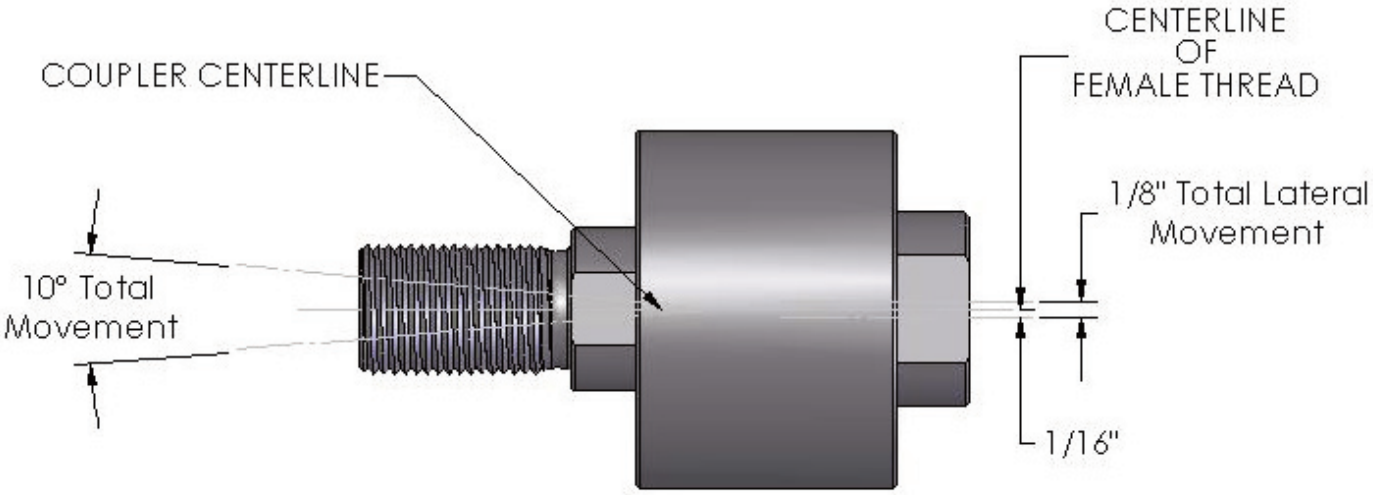

magnaloy

M - Series

PART NO.	A THREAD SIZE	B	C *	D	E	F	G	H	J *	K	MAX. RATED LOAD	PULL AT YIELD	APROX. WEIGHT (LBS.)
M010-01024 M010-01224	5/16-24 3/8-24	1.562	1.750	0.750	0.500	0.625	0.500	0.625	0.375	1.031	1,450 2,425	8,800 9,700	0.5
M015-01420 M015-01620	7/16-20 1/2-20	1.562	2.000	0.750	0.750	0.625	0.500	0.625	0.500	1.031	3,250 4,450	13,000 17,800	0.6
M020-02018 M020-02416 M020-02814	5/8-18 3/4-16 7/8-14	2.125	2.312	1.250	1.125	1.000	0.875	1.125	0.531	1.312	7,150 9,050 14,450	28,600 36,200 57,800	1.4
M030-10014	1-14	2.750	3.062	1.500	1.625	1.250	1.125	1.250	0.562	2.000	19,425	77,700	3.3
M040-10812	1-1/4-12	3.500	4.000	2.000	2.000	1.500	1.250	1.687	0.750	2.500	30,825	123,300	6.9
M050-11612 M050-12412	1-1/2-12 1-3/4-12	4.000	4.375	2.250	2.250	1.750 2.000	1.500	1.937	0.875	2.750	45,750 58,350	183,000 233,400	9.8
M060-12812 M060-20012	1-7/8-12 2-12	5.000	5.625	3.000	3.000	2.250	2.000	2.625	1.375	3.375	67,550 77,450	270,200 309,800	19.8
M070-20812	2-1/4-12	6.750	6.375	3.250	3.500	2.750	2.375	2.875	1.625	3.750	99,250	397,000	35.3
M080-21612 M080-22412 M080-30012	2-1/2-12 2-3/4-12 3-12	7.000	6.500	4.000	3.500	3.250	2.875	3.375 3.375 3.500	1.625	3.875	123,750 150,950 180,850	495,000 603,800 723,400	45.3
M100-30812	3-1/4-12	9.250	8.500	5.250	4.500	4.000	3.375	4.500	2.000	5.500	213,450	853,800	- - -
M140-40812	4 1/4-12	12.875	11.250	7.750	4.500	5.500	4.875	7.000	1.500	8.750	370,850	1,483,400	- - -

* Tolerance +/- .030 inch, all other dimensions +/- .015 inch

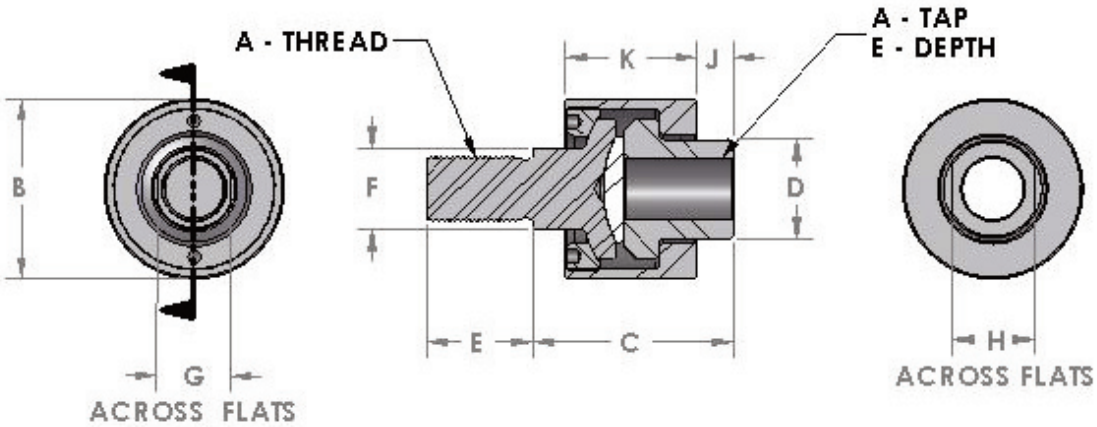

M - Series

Time and Money Saving Features

- Lubricated at factory.
- Adjusted at factory, no clearance or end play.
- Same load rating - push or pull.
- Internal thread mates with standard style No. 2 cylinder piston rods; external thread with style No. 3.
- Total of 7 1/2^0 Spherical Movement and 1/8" Lateral movement capabilities.
- Designed to retro-fit with competitive brands while offering increased strength and misalignment capabilities.
- Manufactured from high tensile and hardened materials for additional strength and dependability.
- Available in metric threads, consult factory.
- Available in Stainless Steel, consult factory.

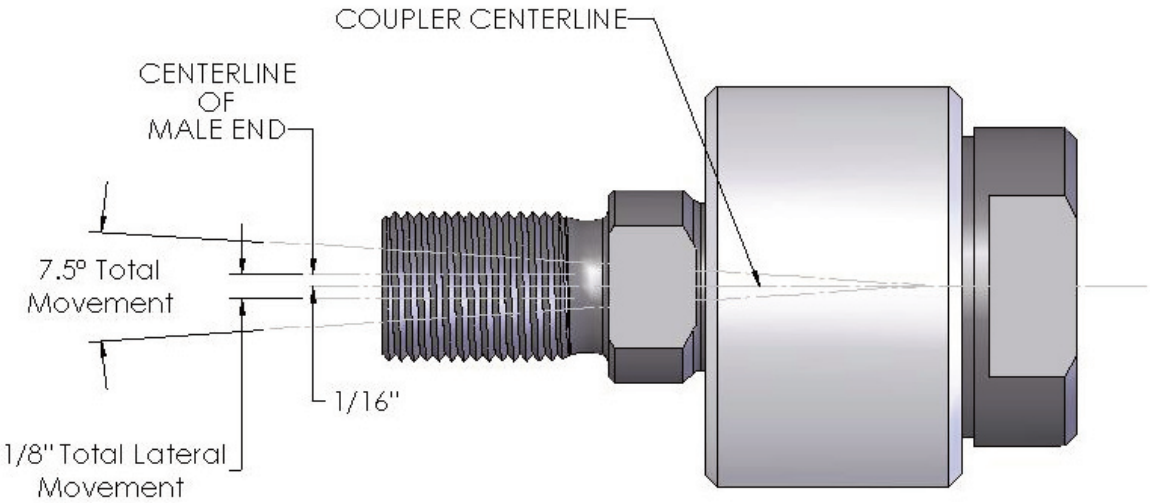

R - Series

PART NO.	A THREAD SIZE	B	C *	D	E	F	G	H	J *	K	MAX. RATED LOAD	APROX. WEIGHT (LBS.)
R010-01024 **R010-01224**	5/16-24 3/8-24	1.115	1.770	0.920	0.500	0.500	0.375	0.750	0.460	0.930	1,450 2,425	0.35
R020-01420 **R020-01620** **R020-02018**	7/16-20 1/2-20 5/8-18	1.365	1.988	1.115	0.750	0.625	0.500	0.875	0.440	1.088	3,250 4,450 6,800	0.55
R030-02416 **R030-02814**	3/4-16 7/8-14	1.990	2.340	1.600	1.125	0.969	0.750	1.313	0.600	1.282	9,050 14,450	1.4
R040-10014 **R040-10812**	1-14 1-1/4-12	3.115	2.964	2.360	1.625	1.450	1.250	1.875	0.743	1.794	19,425 30,825	4.8

* Tolerance +/- .030 inch, all other dimensions +/- .015 inch

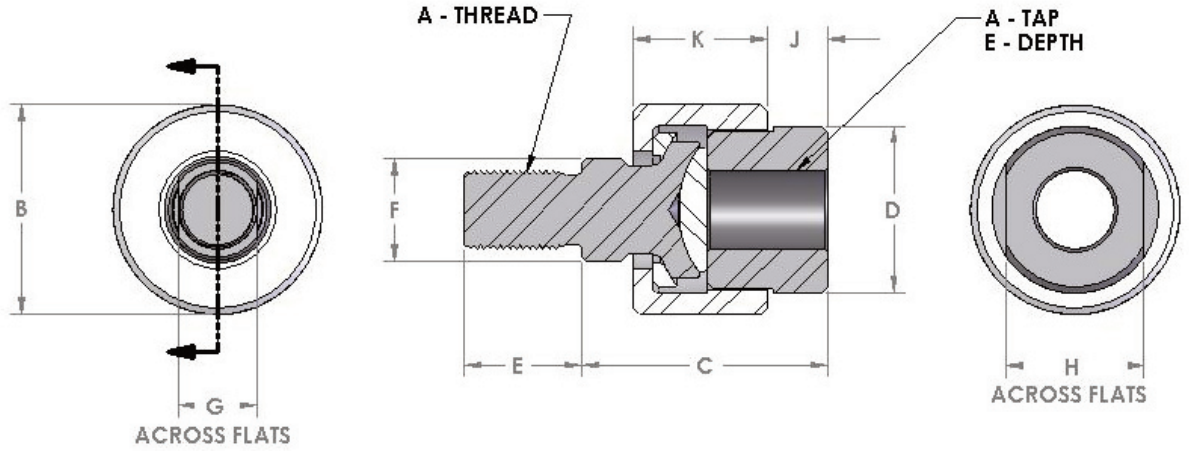

R - Series

THIS PAGE LEFT BLANK INTENTIONALLY

Magnaloy • 170 N Industrial Hwy. Alpena, MI 49707 • 989 356-2186
www.magnaloy.com A Division of Douville Johnston Corporation

SECTION R

REFERENCE SECTION

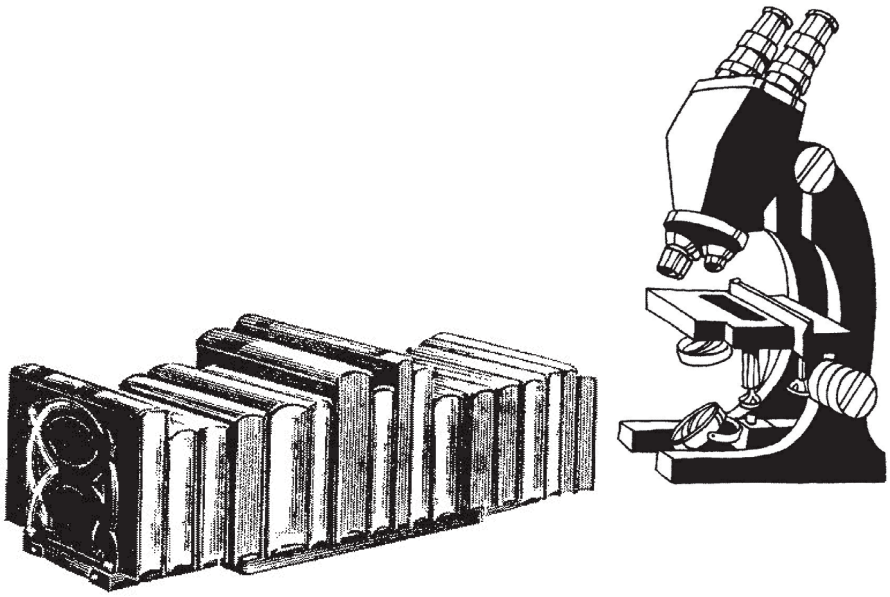

NOTE: *Due to Magnaloy's policy of continuous improvement, specifications are subject to change without notice. Check with the factory or our Web Site at www.magnaloy.com for the latest information.*

The following pages contain several reference items for use with the various Magnaloy Products. To assist in the use of these pages, the top menu bar indicates the product line most likely to be of interest with the page. Additional information on Magnaloy products can be found on our web site at www.magnaloy.com. This resource would contain the most recent information available.

Reference Pages Table of Contents

Standard SAE and Metric Pump Mounting Dimensions 45
NEMA Motor Frame Dimensions 46
IEC Metric Motor Frame Dimensions 47
I/C Engine Flange Mounting Dimensions 52
Bar Manifold Flange and Bracket Mounting Kits 53
Cartridge Relief Valve Cross Reference Table 55
Cartridge Relief Valve Equivalents for D03 Original Design and Series Bar Manifolds 56
Cartridge Relief Valve Cavity Dimensions 57
Standard Valve Interface Pattern Dimensions 59
Manufacturers Cross Reference for Gasket Mounted Valves 61
Information to know about Filler Breathers and Filters 62
Manufacturers Cross Reference for Channel Mounted Cushion Clamps 63
Differential Pressure Indicator Selection Guide 64
Filter Efficency Information 65
Filter Selection Data and Application Guidelines 66
Hydraulic Pipe, Tube & Hose Flow Data 67
Mesh to Micron Conversions 68

magnaloy

SAE - 2 Bolt Mount Pump Flanges

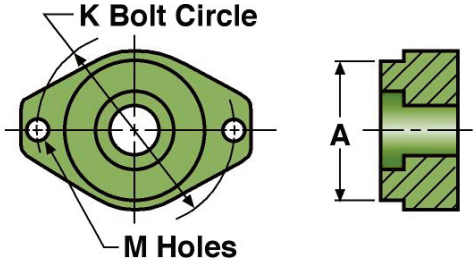

	A	K	M
SAE AA	2.000	3.250	0.406
SAE A	3.250	4.187	0.438
SAE B	4.000	5.750	0.562
SAE C	5.000	7.125	0.688
SAE D	6.000	9.000	0.812
SAE E	6.500	12.500	1.062
SAE F	7.000	13.781	1.062
Mounting Flange	Pilot Dia.	Flange Dimensions	

SAE - 4 Bolt Mount Pump Flanges

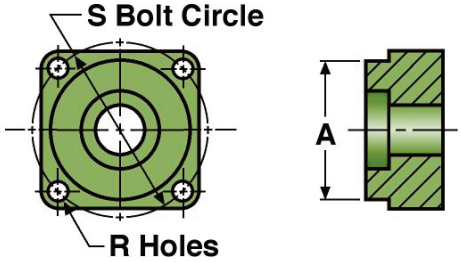

	A	S	R
USA4F17	1.781	2.838	0.375
SAE A	3.250	4.125	0.438
SAE B	4.000	5.000	0.562
SAE C	5.000	6.375	0.562
SAE D	6.000	9.000	0.812
SAE E	6.500	12.500	0.812
SAE F	7.000	13.781	1.062
Mounting Flange	Pilot Dia.	Flange Dimensions	

R

Metric Oval Mount (2 Bolt) Pump Flanges

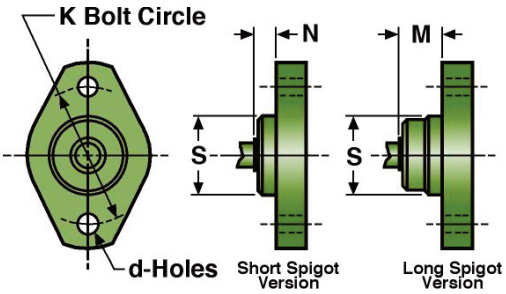

(All dimensions in mm)

	s	K	d	N	M
32 A2	32	56	6.6	8	16
40 A2	40	63	6.6	8	16
50 A2	50	80	9	8	20
63 A2	63	100	9	8	20
80 A2	80	109	11	8	20
100 A2	100	140	14	10	25
112 A2	112	160	14	10	25
125 A2	125	180	18	10	32
140 A2	140	200	18	10	32
160 A2	160	224	22	10	40
180 A2	180	250	22	10	40
200 A2	200	280	26	10	50
Mounting Flange	Pilot Dia.	Flange Dimensions			

Metric Square Mount (4 Bolt) Pump Flanges

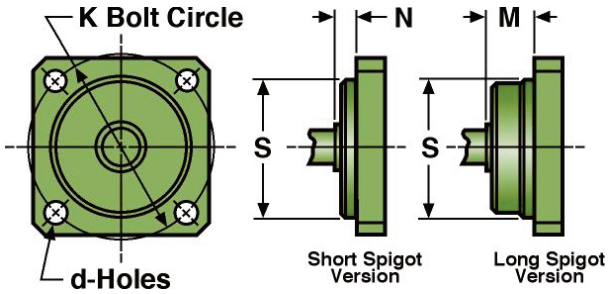

(All dimensions in mm)

	s	K	d	N	M
63 B4	63	85	9	8	20
63 S4	63	80	M8	8	20
80 B4	80	103	9	8	20
80 S4	80	100	9	8	20
100 B4	100	125	11	10	25
112 B4	112	140	11	10	25
125 B4	125	160	14	10	32
140 B4	140	180	14	10	32
160 B4	160	200	18	10	40
180 B4	180	224	18	10	40
200 B4	200	250	22	10	50
224 B4	224	280	22	10	50
250 B4	250	315	26	10	50
Mounting Flange	Pilot Dia.	Flange Dimensions			

NEMA 'C' Face Motor Dimensions

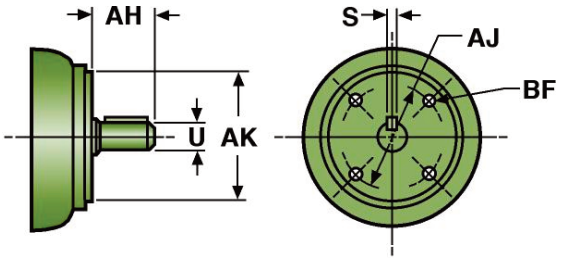

R

U-Frame Dimensions

	182UC 184UC	213UC 215UC	254UC 256UC	284UC 286UC	324USC 326USC	324UC 326UC	364USC 365USC	364UC 365UC	404USC 405USC	404UC 405UC	444USC 445USC	444UC 445UC
AH	2.125	2.75	3.50	4.625	3.00	5.375	3.50	6.125	4.00	6.875	4.00	8.375
U	7/8	1 1/8	1 3/8	1 5/8	1 5/8	1 7/8	1 7/8	2 1/8	2 1/8	2 3/8	2 1/8	2 7/8
S	3/16	1/4	5/16	3/8	3/8	1/2	1/2	1/2	1/2	5/8	1/2	3/4
AK	4.50	8.50	8.50	10.50	12.50	12.50	12.50	12.50	12.50	12.50	16.00	16.00
AJ	5.875	7.25	7.25	9.00	11.00	11.00	11.00	11.00	11.00	11.00	14.00	14.00
BF	3/8-16	1/2-13	1/2-13	1/2-13	5/8-11	5/8-11	5/8-11	5/8-11	5/8-11	5/8-11	5/8-11	5/8-11
HP*	1 2	3 5	7.5 10	15 20	25 30	25 30	40 50	40 50	60 75	60 75	125 150	125 150

T-Frame Dimensions

	056C	143TC 145TC	182TC 184TC	213TC 215TC	254TC 256TC	284TSC 286TSC	284TC 286TC	324TSC 326TSC	324TC 326TC	364TSC 365TSC	364TC 365TC	404TSC 405TSC	404TC 405TC	444TSC 449TSC	444TC 449TC
AH	2.062	2.125	2.625	3.125	3.75	3.00	4.375	3.50	5.00	3.50	5.625	4.00	7.00	4.50	8.25
U	5/8	7/8	1 1/8	1 3/8	1 5/8	1 5/8	1 7/8	1 7/8	2 1/8	1 7/8	2 3/8	2 1/8	2 7/8	2 3/8	3 3/8
S	3/16	3/16	1/4	5/16	3/8	3/8	1/2	1/2	1/2	1/2	5/8	1/2	3/4	5/8	7/8
AK	4.50	4.50	8.50	8.50	8.50	10.50	10.50	12.50	12.50	12.50	12.50	12.50	12.50	16.00	16.00
AJ	5.875	5.875	7.25	7.25	7.25	9.00	9.00	11.00	11.00	11.00	11.00	11.00	11.00	14.00	14.00
BF	3/8-16	3/8-16	1/2-13	1/2-13	1/2-13	1/2-13	1/2-13	5/8-11	5/8-11	5/8-11	5/8-11	5/8-11	5/8-11	5/8-11	5/8-11
HP*	1/4 1/2	1 2	3 5	7.5 10	15 20	25 30	25 30	40 50	40 50	60 75	60 75	100 125	100 125	150 200	150 200

D-Frame Dimensions

	143TD 145TD	182D 184D	182TD 184TD	213D 215D	213TD 215TD	254UD 256UD	254TD 256TD	284UD 286UD	284TSD 286TSD	284TD 286TD	324USD 326USD	324UD 326UD	324TSD 326TSD	324TD 326TD	364USD 365USD
AH	2.25	2.25	2.75	3.00	3.38	3.75	4.00	4.88	3.25	4.62	3.25	5.62	3.75	5.25	3.75
U	7/8	7/8	1 1/8	1 1/8	1 3/8	1 3/8	1 5/8	1 5/8	1 5/8	1 7/8	1 5/8	1 7/8	1 7/8	2 1/8	1 7/8
S	3/16	3/16	1/4	1/4	5/16	5/16	3/8	3/8	3/8	1/2	3/8	1/2	1/2	1/2	1/2
AK	9.00	9.00	9.00	9.00	9.00	11.00	11.00	11.00	11.00	11.00	14.00	14.00	14.00	14.00	14.00
AJ	10.00	10.00	10.11	10.00	10.00	12.50	12.50	12.50	12.50	12.50	16.00	16.00	16.00	16.00	16.00
BF	9/16	9/16	9/16	9/16	9/16	53/64	53/64	53/64	53/64	53/64	53/64	53/64	53/64	53/64	53/64
HP*	1 2	1 2	3 5	3 5	7.5 10	7.5 10	15 20	15 20	25 30	25 30	25 30	25 30	40 50	40 50	40 50

	364UD 365UD	364TSD 365TSD	364TD 365TD	404USD 405USD	404UD 405UD	404TSD 405TSD	404TD 405TD	444USD 445USD	444UD 445UD	444TSD 445TSD	444TD 445TD	447TSD 449TSD	447TD 449TD	504SD 505SD	504UD 505UD
AH	6.38	3.75	5.88	4.25	7.12	4.25	7.25	4.25	6.620	4.75	8.50	4.75	8.50	4.25	8.62
U	2 1/8	1 7/8	2 3/8	2 1/8	2 3/8	2 1/8	2 7/8	2 1/8	2 7/8	2 3/8	3 3/8	2 3/8	3 3/8	2 1/8	2 7/8
S	1/2	1/2	5/8	1/2	5/8	1/2	3/4	1/2	3/4	5/8	7/8	5/8	7/8	1/2	3/4
AK	14.00	14.00	14.00	18.00	18.00	18.00	18.00	18.00	18.00	18.00	18.00	18.00	18.00	18.00	18.00
AJ	16.00	16.00	16.00	20.00	20.00	20.00	20.00	20.00	20.00	20.00	20.00	20.00	20.00	22.00	22.00
BF	53/64	53/64	53/64	53/64	53/64	53/64	53/64	53/64	53/64	53/64	53/64	53/64	53/64	53/64	53/64
HP*	40 50	60 75	60 75	60 75	60 75	100 125	100 125	125 150	125 150	150 200	150 200	150 200	150 200	200 250	200 250

** Horse Power at 1750 RPM*

magnaloy

IEC Metric 'C' Flange Motor Dimensions

(see page 51 for FF Flange Dimensions)

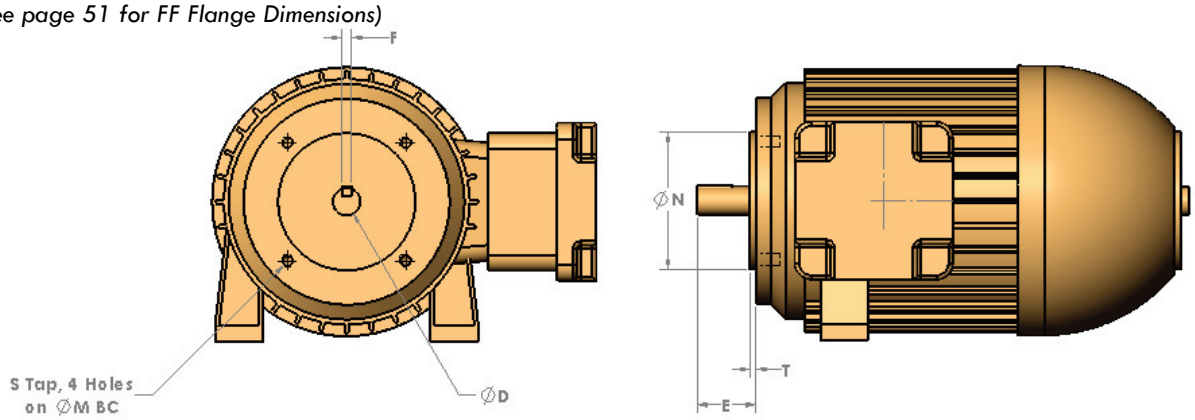

Motor Type	Form	IEC	Flange Group	Flange Type	E	D	F	N	M	S	T	HP
BF5 63	30--	F115	095ML	FF	23	11	4	95	115	10	3.0	0.25

Motor Type	Form	IEC	Flange Group	Flange Type	E	D	F	N	M	S	T	HP
BF5 71M42 (2 pole)	30--	F130	110ML	FF	30	14	5	110	130	10	3.5	0.74
BF5 71M42 (2 pole)	36--	F85	070ML	C	30	14	5	70	85	M6	2.5	0.74
BF5 71M44 (4 pole)	30--	F130	110ML	FF	30	14	5	110	130	10	3.5	0.50
BF5 71M44 (4 pole)	36--	F85	070ML	C	30	14	5	70	85	M6	2.5	0.50
BF5 71M46 (6 pole)	30--	F130	110ML	FF	30	14	5	110	130	10	3.5	0.34
BF5 71M46 (6 pole)	36--	F85	070ML	C	30	14	5	70	85	M6	2.5	0.34
BF5 71M48 (8 pole)	30--	F130	110ML	FF	30	14	5	110	130	10	3.5	0.16
BF5 71M48 (8 pole)	36--	F85	070ML	C	30	14	5	70	85	M6	2.5	0.16

Motor Type	Form	IEC	Flange Group	Flange Type	E	D	F	N	M	S	T	HP
BF5 80M42 (2 pole)	30--	F165	130ML	FF	40	19	6	130	165	12	3.5	1.47
BF5 80M42 (2 pole)	36--	F100	080ML	C	40	19	6	80	100	M6	3.0	1.47
BF5 80M44 (4 pole)	30--	F165	130ML	FF	40	19	6	130	165	12	3.5	1.01
BF5 80M 44 (4 pole)	36--	F100	080ML	C	40	19	6	80	100	M6	3.0	1.01
BF5 80M66 (6 pole)	30--	F165	130ML	FF	40	19	6	130	165	12	3.5	0.74
BF5 80M66 (6 pole)	36--	F100	080ML	C	40	19	6	80	100	M6	3.0	0.74
BF5 80M68 (8 pole)	30--	F165	130ML	FF	40	19	6	130	165	12	3.5	0.34
BF5 80M68 (8 pole)	36--	F100	080ML	C	40	19	6	80	100	M6	3.0	0.34

R

Motor Type	Form	IEC	Flange Group	Flange Type	E	D	F	N	M	S	T	HP
BF5 90L42 (2 pole)	30--	F165	130ML	FF	50	24	8	130	165	12	3.5	2.95
BF5 90L42 (2 pole)	36--	F115	095ML	C	50	24	8	95	115	M8	3.0	2.95
BF5 90L44 (4 pole)	30--	F165	130ML	FF	50	24	8	130	165	12	3.5	2.01
BF5 90L44 (4 pole)	36--	F115	095ML	C	50	24	8	95	115	M8	3.0	2.01
BF5 90L66 (6 pole)	30--	F165	130ML	FF	50	24	8	130	165	12	3.5	1.47
BF5 90L66 (6 pole)	36--	F115	095ML	C	50	24	8	95	115	M8	3.0	1.47
BF5 90L68 (8 pole)	30--	F165	130ML	FF	50	24	8	130	165	12	3.5	0.74
BF5 90L68 (8 pole)	36--	F115	095ML	C	50	24	8	95	115	M8	3.0	0.74

Motor Type	Form	IEC	Flange Group	Flange Type	E	D	F	N	M	S	T	HP
BF5 100L42 (2 pole)	30--	F215	180ML	FF	60	26	8	180	215	15	4.0	4.02
BF5 100L42 (2 pole)	36--	F130	110ML	C	60	26	8	110	130	M8	3.5	4.02
BF5 100L44 (4 pole)	30--	F215	180ML	FF	60	26	8	180	215	15	4.0	4.02
BF5 100L44 (4 pole)	36--	F130	110ML	C	60	26	8	110	130	M8	3.5	4.02
BF5 100L46 (6 pole)	30--	F215	180ML	FF	60	26	8	180	215	15	4.0	2.01
BF5 100L46 (6 pole)	36--	F130	110ML	C	60	26	8	110	130	M8	3.5	2.01
BF5 100L48 (8 pole)	30--	F215	180ML	FF	60	26	8	180	215	15	4.0	1.47
BF5 100L48 (8 pole)	36--	F130	110ML	C	60	26	8	110	130	M8	3.5	1.47

Motor Type	Form	IEC	Flange Group	Flange Type	E	D	F	N	M	S	T	HP
BF5 112M22 (2 pole)	30--	F215	180ML	FF	60	28	8	180	215	15	4.0	5.36
BF5 112M22 (2 pole)	36--	F130	110ML	C	60	28	8	110	130	M8	3.5	5.36
BF5 112M44 (4 pole)	30--	F215	180ML	FF	60	28	8	180	215	15	4.0	5.36
BF5 112M44 (4 pole)	36--	F130	110ML	C	60	28	8	110	130	M8	3.5	5.36
BF5 112M46 (6 pole)	30--	F215	180ML	FF	60	28	8	180	215	15	4.0	2.95
BF5 112M46 (6 pole)	36--	F130	110ML	C	60	28	8	110	130	M8	3.5	2.95
BF5 112M48 (8 pole)	30--	F215	180ML	FF	60	28	8	180	215	15	4.0	2.01
BF5 112M48 (8 pole)	36--	F130	110ML	C	60	28	8	110	130	M8	3.5	2.01

magnaloy

Motor Type	Form	IEC	Flange Group	Flange Type	E	D	F	N	M	S	T	HP
BF5 132S62 (2 pole)	30--	F265	230ML	FF	80	38	10	230	265	15	4.0	10.05
BF5 132S62 (2 pole)	36--	F165	130ML	C	80	38	10	130	165	M10	3.5	10.05
BF5 132M84 (4 pole)	30--	F265	230ML	FF	80	38	10	230	265	15	4.0	10.05
BF5 132M84 (4 pole)	36--	F165	130ML	C	80	38	10	130	165	M10	3.5	10.05
BF5 132M46 (6 pole)	30--	F265	230ML	FF	80	38	10	230	265	15	4.0	5.36
BF5 132M46 (6 pole)	36--	F165	130ML	C	80	38	10	130	165	M10	3.5	5.36
BF5 132M88 (8 pole)	30--	F265	230ML	FF	80	38	10	230	265	15	4.0	4.02
BF5 132M88 (8 pole)	36--	F165	130ML	C	80	38	10	130	165	M10	3.5	4.02

Motor Type	Form	IEC	Flange Group	Flange Type	E	D	F	N	M	S	T	HP
BF5 160M42 (2 pole)	30--	F300	250ML	FF	110	42	12	250	300	19	5.0	20.11
BF5 160L64 (4 pole)	30--	F300	250ML	FF	110	42	12	250	300	19	5.0	20.11
BF5 160L66 (6 ploe)	30--	F300	250ML	FF	110	42	12	250	300	19	5.0	14.75
BF5 160M48 (8 pole)	30--	F300	250ML	FF	110	42	12	250	300	19	5.0	7.37

Motor Type	Form	IEC	Flange Group	Flange Type	E	D	F	N	M	S	T	HP
BF5 180M42 (2 pole)	30--	F300	250ML	FF	110	48	14	250	300	19	5.0	29.49
BF5 180L64 (4 pole)	30--	F300	250ML	FF	110	48	14	250	300	19	5.0	29.49
BF5 180L46 (6 pole)	30--	F300	250ML	FF	110	48	14	250	300	19	5.0	20.11
BF5 180L48 (8 pole)	30--	F300	250ML	FF	110	48	14	250	300	19	5.0	14.75

Motor Type	Form	IEC	Flange Group	Flange Type	E	D	F	N	M	S	T	HP
BF5 200L82 (2 pole)	30--	F350	300ML	FF	110	55	16	300	350	19	5.0	49.6
BF5 200L64 (4 pole)	30--	F350	300ML	FF	110	55	16	300	350	19	5.0	49.6
BF5 200L46 (6 pole)	30--	F350	300ML	FF	110	55	16	300	350	19	5.0	29.49
BF5 200L48 (8 pole)	30--	F350	300ML	FF	110	55	16	300	350	19	5.0	20.11

R

Motor Type	Form	IEC	Flange Group	Flange Type	E	D	F	N	M	S	T	HP
BF5 225M42 (2 pole)	30--	F400	350ML	FF	110	55	16	350	400	19	5.0	60.32
BF5 225M44 (4 pole)	30--	F400	350ML	FF	110	55	16	350	400	19	5.0	60.32
BF5 225M46 (6 pole)	30--	F400	350ML	FF	110	55	16	350	400	19	5.0	40.21
BF5 225M48 (8 pole)	30--	F400	350ML	FF	110	55	16	350	400	19	5.0	29.49

Motor Type	Form	IEC	Flange Group	Flange Type	E	D	F	N	M	S	T	HP
BF4 250M42 (2 pole)	30--	F500	450ML	FF	140	60	18	450	500	19	5.0	73.73
BF4 250M44 (4 pole)	30--	F500	450ML	FF	140	65	18	450	500	19	5.0	73.73
BF4 250M26 (6 pole)	30--	F500	450ML	FF	140	65	18	450	500	19	5.0	49.60
BF4 250M48 (8 pole)	30--	F500	450ML	FF	140	65	18	450	500	19	5.0	40.21

Motor Type	Form	IEC	Flange Group	Flange Type	E	D	F	N	M	S	T	HP
BF4 280MA62 (2 pole)	30--	F500	450ML	FF	140	65	18	450	500	19	5.0	120.64
BF4 280MA84 (4 pole)	30--	F500	450ML	FF	140	75	20	450	500	19	5.0	120.64
BF4 280MA46 (6 pole)	30--	F500	450ML	FF	140	75	20	450	500	19	5.0	73.73
BF4 280MA68 (8 pole)	30--	F500	450ML	FF	140	75	20	450	500	19	5.0	60.32

Motor Type	Form	IEC	Flange Group	Flange Type	E	D	F	N	M	S	T	HP
BF4 315MA62 (2 pole)	30--	F600	550ML	FF	140	65	18	550	600	24	6.0	176.94
BF4 315MA64 (4 pole)	30--	F600	550ML	FF	170	80	22	550	600	24	6.0	176.94
BF4 315MA66 (6 pole)	30--	F600	550ML	FF	170	80	22	550	600	24	6.0	120.64
BF4 315MA68 (8 pole)	30--	F600	550ML	FF	170	80	22	550	600	24	6.0	100.54

Motor Type	Form	IEC	Flange Group	Flange Type	E	D	F	N	M	S	T	HP
BF3 315MA82 (2 pole)	30--	F600	550ML	FF	140	70	20	550	600	24	6.0	268.10
BF3 315MA84 (4 pole)	30--	F600	550ML	FF	170	90	25	550	600	24	6.0	268.10
BF3 315MA86 (6 pole)	30--	F600	550ML	FF	170	90	25	550	600	24	6.0	176.94
BF3 315MA88 (8 pole)	30--	F600	550ML	FF	170	90	2	550	600	24	6.0	147.45

Motor Type	Form	IEC	Flange Group	Flange Type	E	D	F	N	M	S	T	HP
B14 63A	36--	F75	060ML	C	23	11	4	60	75	M5	2.5	0.25
B14 63B	36--	F100	080ML	C	23	11	4	80	100	M6	2.5	0.74
B14 71A	36--	F85	070ML	C	30	14	5	70	85	M6	2.5	0.34
B14 71B	36--	F115	095ML	C	30	14	5	95	115	M8	3.0	1.48
B14 80A	36--	F100	080ML	C	40	19	6	80	100	M8	3.0	0.74
B14 80 B	36--	F130	110ML	C	40	19	6	110	130	M8	3.5	2.68
B14 90S/L A	36--	F115	095ML	C	50	24	8	95	115	M8	3.0	1.48
B14 90S/L B	36--	F130	110ML	C	50	24	8	110	130	M8	3.5	2.68
B14 100L A	36--	F130	110ML	C	60	28	8	110	130	M8	3.5	2.68
B14 100L B	36--	F165	130ML	C	60	28	8	130	165	M10	3.5	6.71
B14 112M A	36--	F130	110ML	C	60	28	8	110	130	M8	3.5	2.68
B14 112M B	36--	F165	130ML	C	60	28	8	130	165	M10	3.5	6.71
B14 132S/M A	36--	F165	130ML	C	80	38	10	130	165	M10	3.5	6.71
B14 160M/L A	36--	F215	180ML	C	110	42	12	180	215	M12	4.0	7.50

R

IEC Metric 'FF' Flange Motor Dimensions

(see page 47 for C Flange Dimensions)

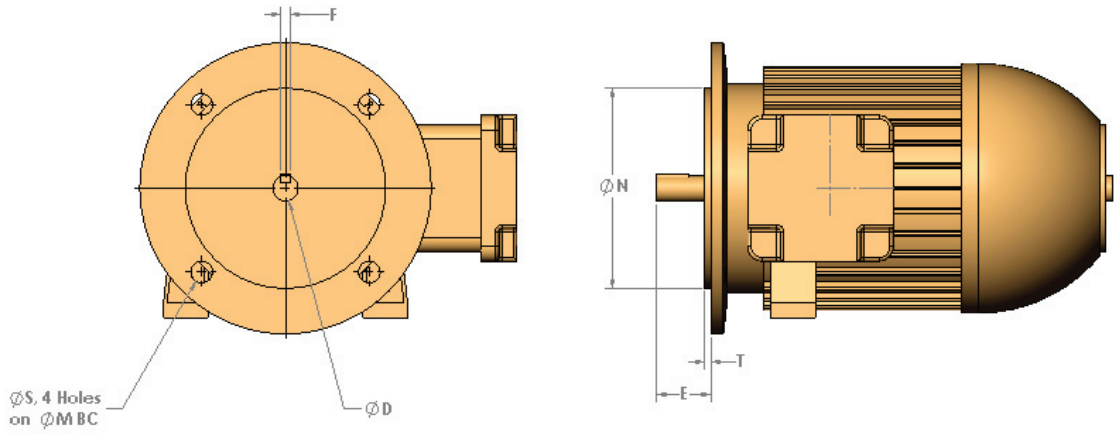

I/C Engine Dimensions

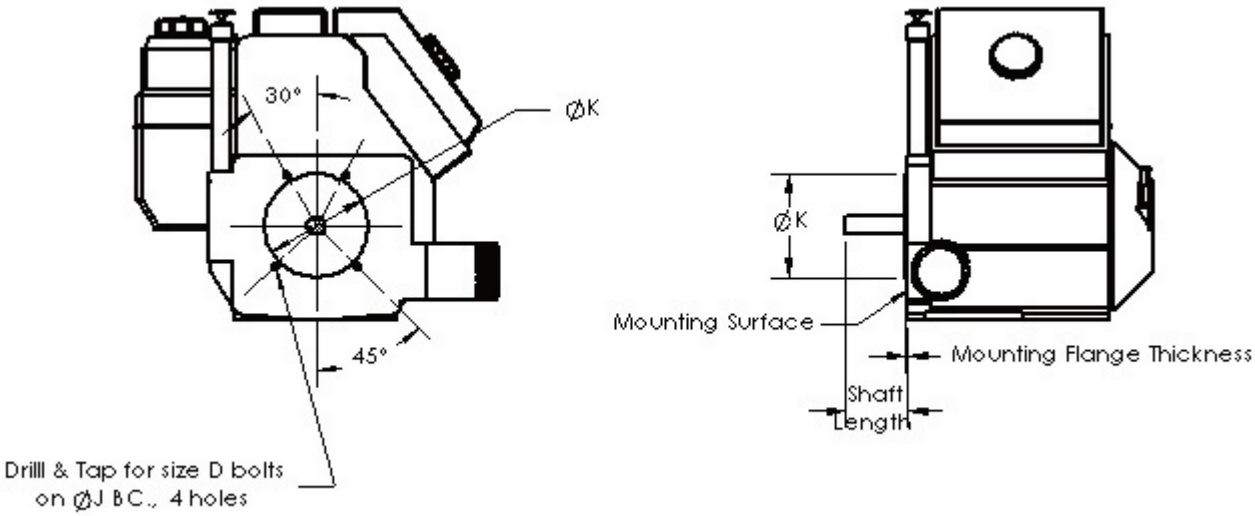

	K	J	D
E575	5.75	6.50	3/8-16
E644	6.437	7.75	7/16-14
E700	7.00	7.75	7/16-14
E787	7.875	9.25	7/16-14
Engine Size Group	**Pilot Dia.**	**Flange Dimensions**	

Mounting Flange & Mounting Bracket Kits

magnaloy

R

D03 Bar Manifold Parallel & Series

Mounting Bracket Kit
BK-A03
(2 Brackets with Bolts)
Request Separately

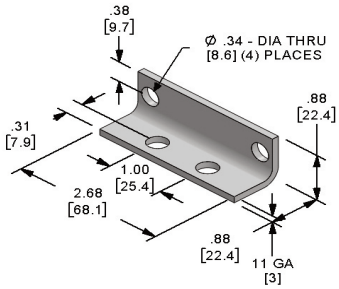

D03 Standard Flow Retro Design Manifold

Mounting Bracket Kit
BKR-A03
(2 Brackets with Bolts)

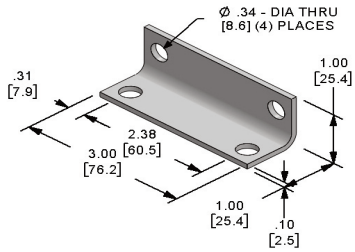

D03 High Flow Retro Design Manifold

Mounting Bracket Kit
BKR-AH03
(2 Brackets with Bolts)

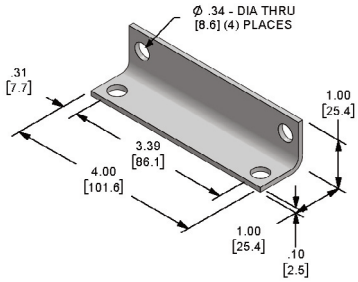

D03 Bar Manifold Parallel & Series

Mounting Flange Kit
FK-A03
(Includes Bolts)
Optional - Order Separately

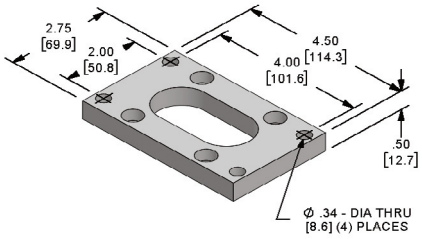

D05 Bar Manifold Parallel & Series

Mounting Flange Kit
FK-A05
(Includes Bolts)
Optional - Order Separately
For D05 Standard Flow Manifolds Only

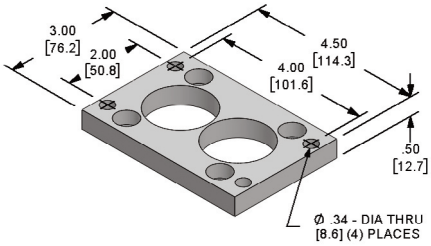

D05 Bar Manifold Parallel

Mounting Bracket Kit
BK-A05
(2 Brackets with Bolts)
Request Separately

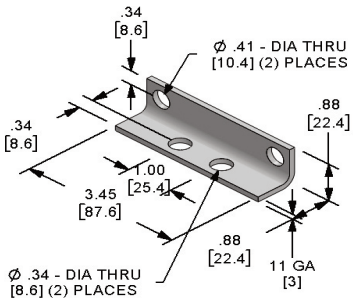

D05 Bar Manifold Series

Mounting Bracket Kit
BKR-A05
(2 Brackets with Bolts)

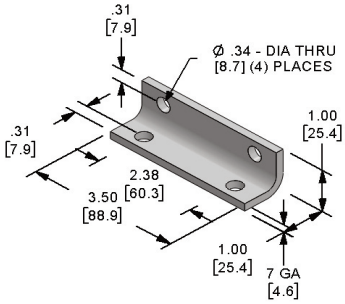

R

D08 Bar Manifold Parallel

Mounting Bracket Kit
BK-A08
(2 Brackets with Bolts)
Request Separately

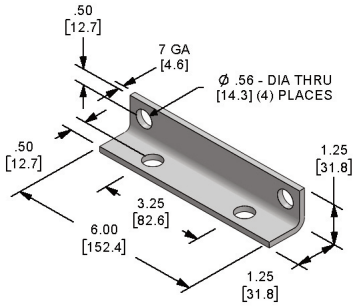

D08 Bar Manifold Series

Mounting Bracket Kit
BKR-SS08
(2 Brackets with Bolts)

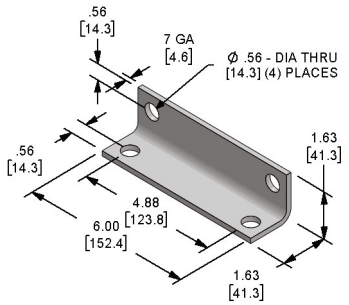

D08 High Flow Retro Design Manifold

Mounting Bracket Kit
BKR-AH08
(2 Brackets with Bolts)

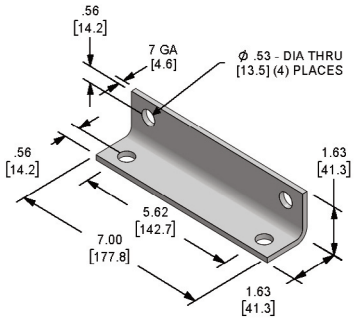

Usage: *All Current Bar Manifolds (Except D03 "SBM" and D03 Series) & Subplates w/C-10-2 Cavity (Pressure at Nose)*

Magnaloy Part Number	Mantech Part Number	Delta Power Part Number	Pressure Range/Setting
RV-C10-2-02	S-10-1-2	DE-RVA-00-0200	50-200 PSI
RV-C10-2-15	S-10-1-15	DE-RVA-00-1500	200-1500 PSI
RV-C10-2-30	S-10-1-30	DE-RVA-00-3000	1500-3000 PSI

Usage: *Current D03 Series and D03 Original Design ("SBM") Bar Manifolds) (Reverse Flow Cartridge) C-10-2 Cavity (Pressure at Side)*

Magnaloy Part Number	Mantech Part Number	Delta Power Part Number	Pressure Range/Setting
RV-C10-2R-02	S-10-2-2	DE-RVD-00-0200	50-200 PSI
RV-C10-2R-15	S-10-2-15	DE-RVD-00-1500	200-1500 PSI
RV-C10-2R-30	S-10-2-30	DE-RVD-00-3000	1500-3000 PSI

Usage: D05 Original Design *Bar Manifolds and All Current w/Sun T-3A Cavity (Pressure at Nose)*

Magnaloy Part Number	Mantech Part Number	Delta Power Part Number	Pressure Range/Setting
RV-T3A-08	S-10-3-8	RPGCJDV	25-800 PSI
RV-T3A-15	S-10-3-15	RPGCJBV	50-1500 PSI
RV-T3A-30	S-10-3-30	RPGCJAV	100-3000 PSI

Usage: *All Current w/Sun T-10A Cavity (Pressure at Nose)*

Magnaloy Part Number	Mantech Part Number	Delta Power Part Number	Pressure Range/Setting
RV-T10A-15	S-10-10-15	RPECJBV	50-1500 PSI
RV-T10A-30	S-10-10-30	RPECJAV	100-3000 PSI

R

Supplier	Part Number		Pressure Range
	Magnaloy	Mantech (Original Model)	
Magnaloy Coupling Co. (for D03 Series & Original Design (SBM) Manifolds)	RV-C10-2R-02	S-10-2-2	50-200 PSI
	RV-C10-2R-15	S-10-2-15	200-1500 PSI
	RV-C10-2R-30	S-10-2-30	1500-3000 PSI
Delta Power Hydraulics	DE-RVD-00-0200		50-200 PSI
	DE-RVD-00-1500		200-1500 PSI
	DE-RVD-00-3000		1500-3000 PSI

Valves requiring equivalent cavities to illustrations shown below may be substituted.

This is a Standard C10-2 Cavity except the valve has a reverse flow with SIDE INLET and NOSE OUTLET.

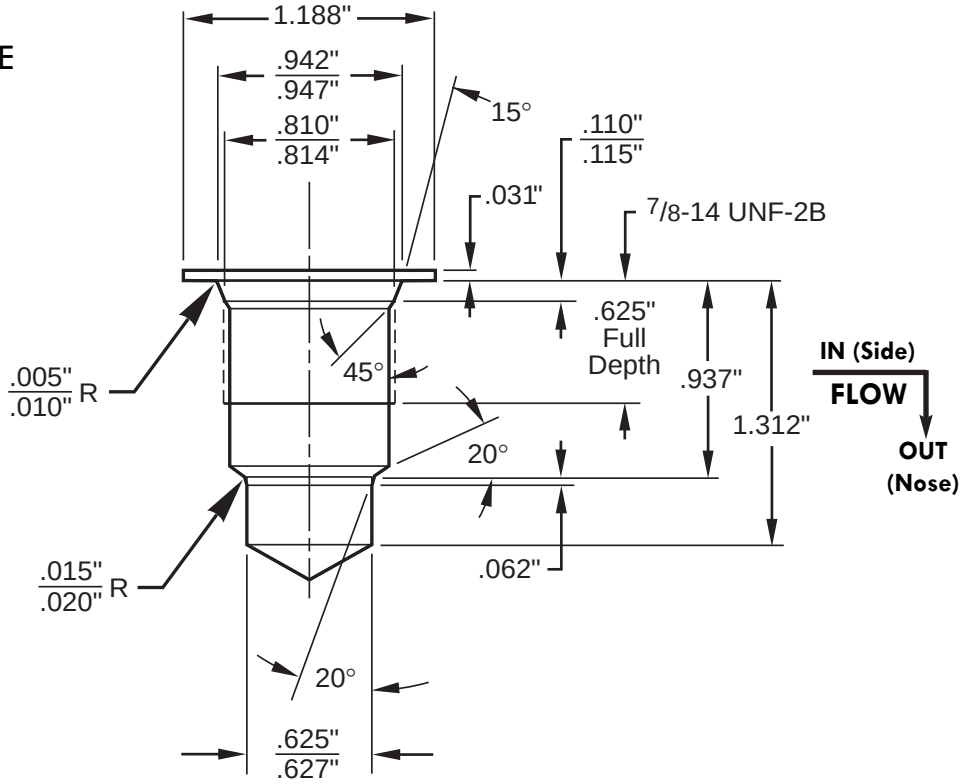

C-10-2 Cavity Detail

Common C-10-2

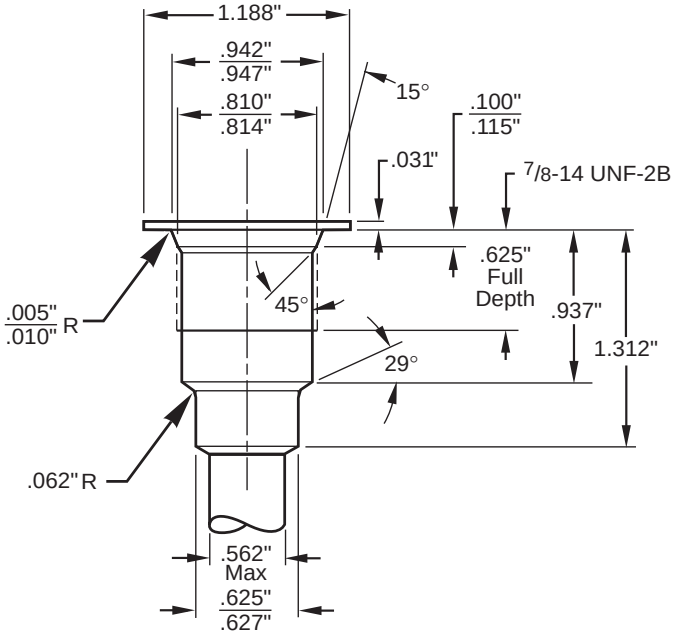

Common C-16-2

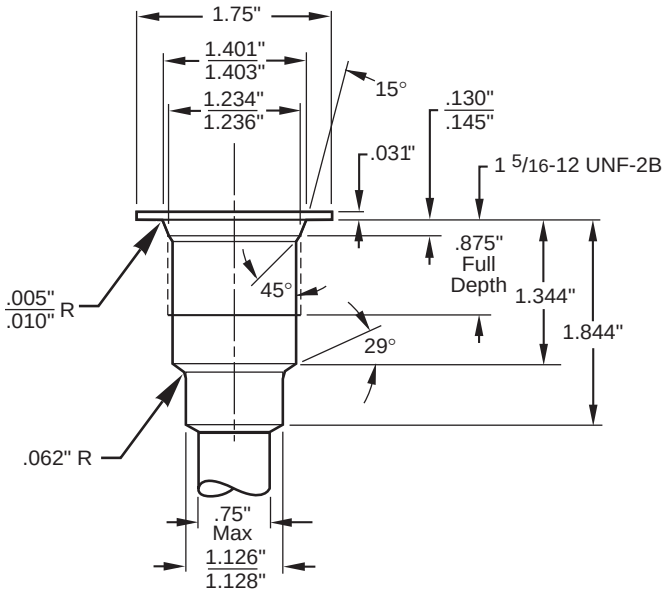

Sun T-10A

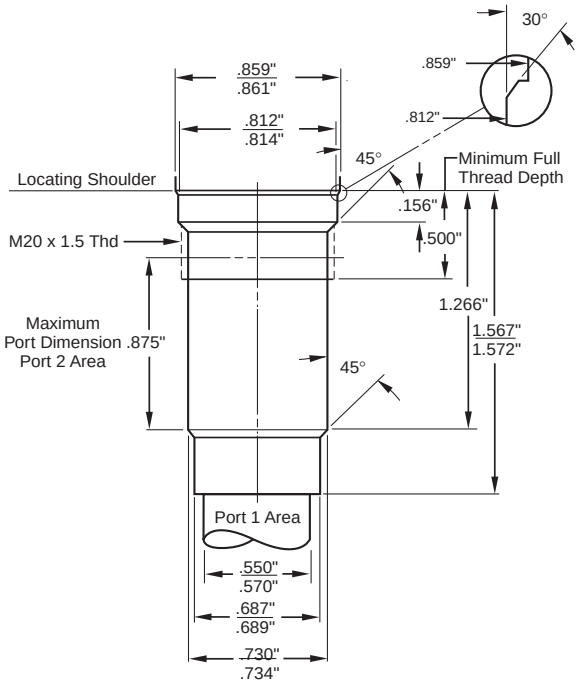

Sun T-3A

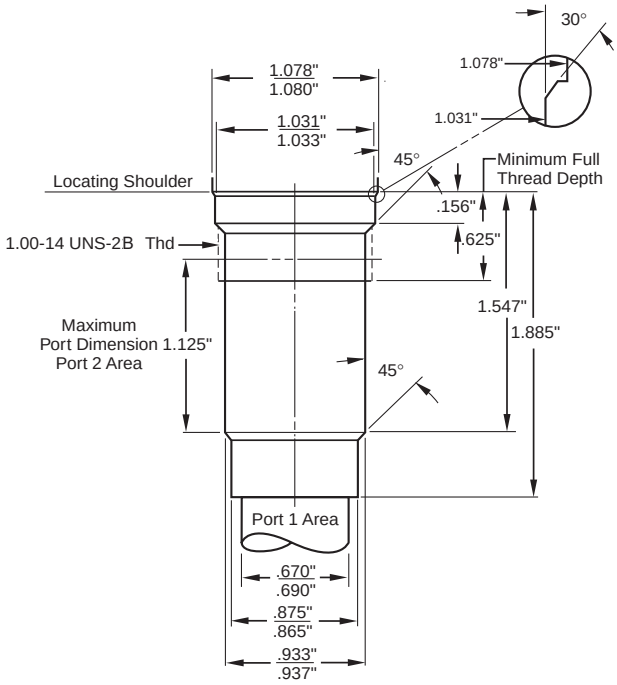

R

Sun T-16A

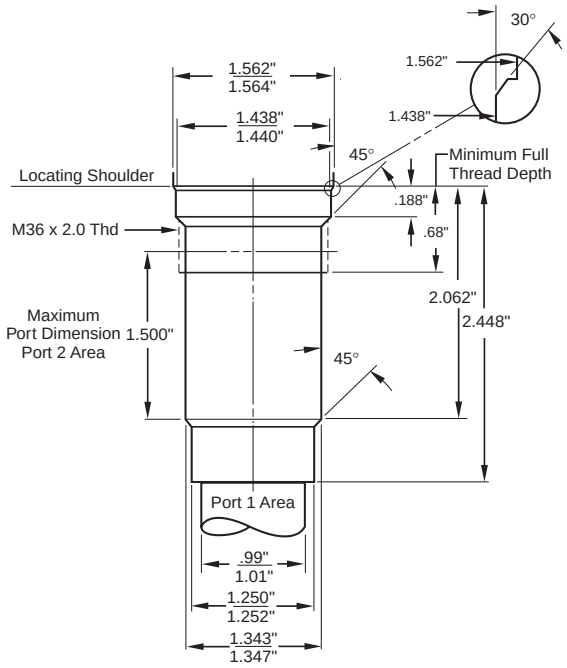
30°
1.562"
1.562"
1.564"
1.438"
1.438"
1.440"
45°
Minimum Full
Thread Depth
Locating Shoulder
.188"
M36 x 2.0 Thd
.68"
2.062"
2.448"
Maximum
Port Dimension 1.500"
Port 2 Area
45°
Port 1 Area
.99"
1.01"
1.250"
1.252"
1.343"
1.347"

D03 Directional Valve Interface

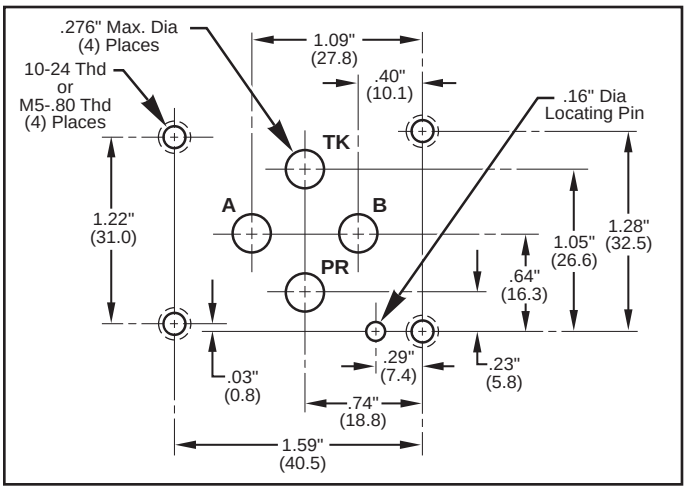

D05 Directional Valve Interface

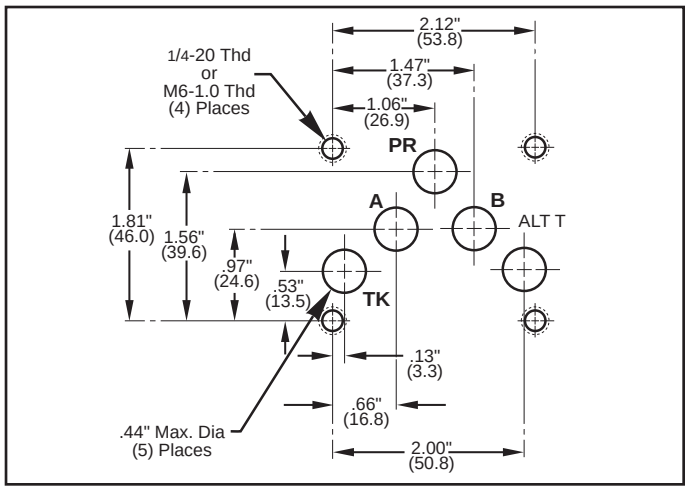

D05E Directional Valve Interface

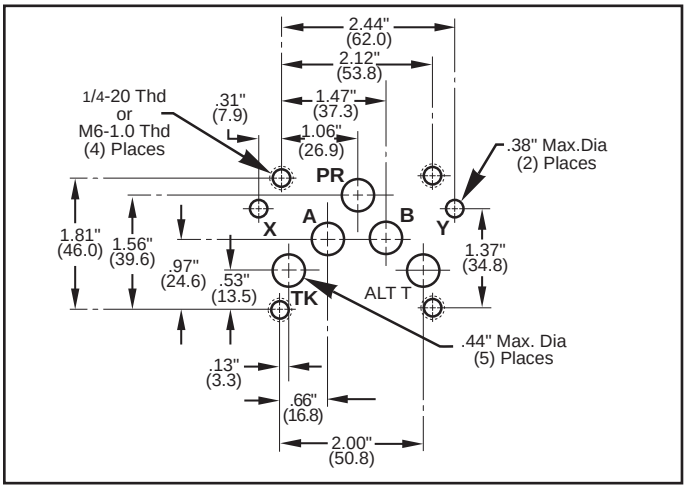

D05H Directional Valve Interface

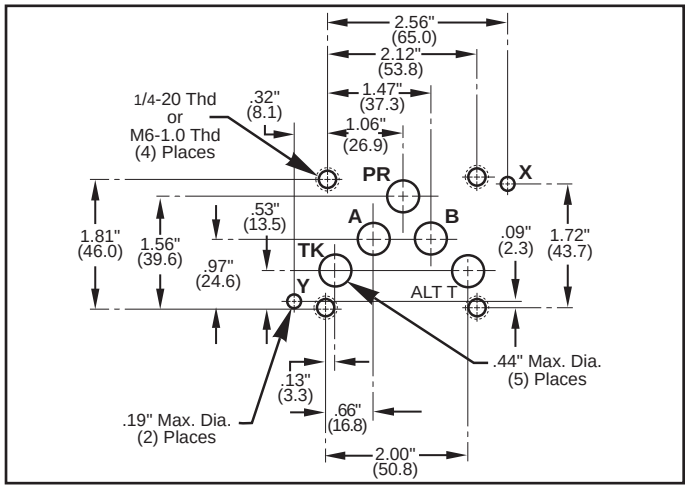

D07 Directional Valve Interface

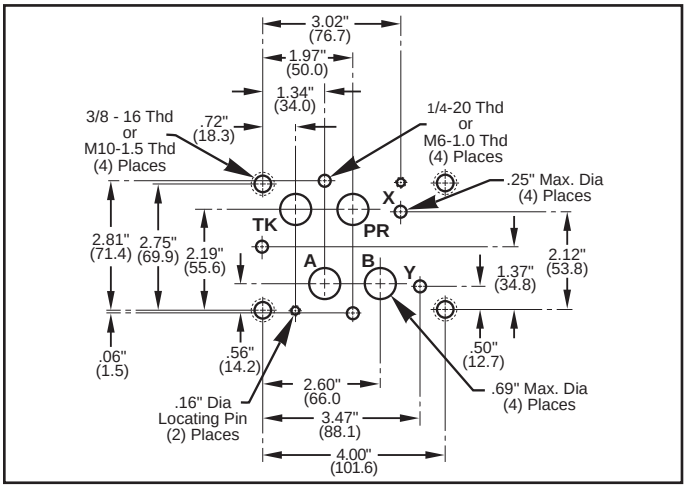

D08 Directional Valve Interface

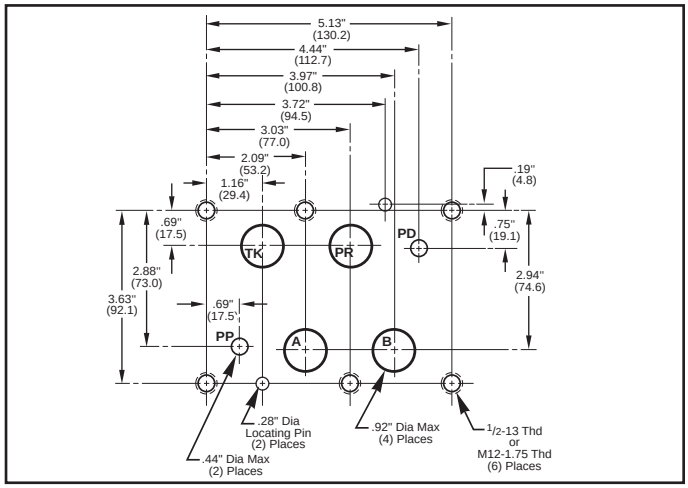

R

2F06 Flow Control Valve Interface

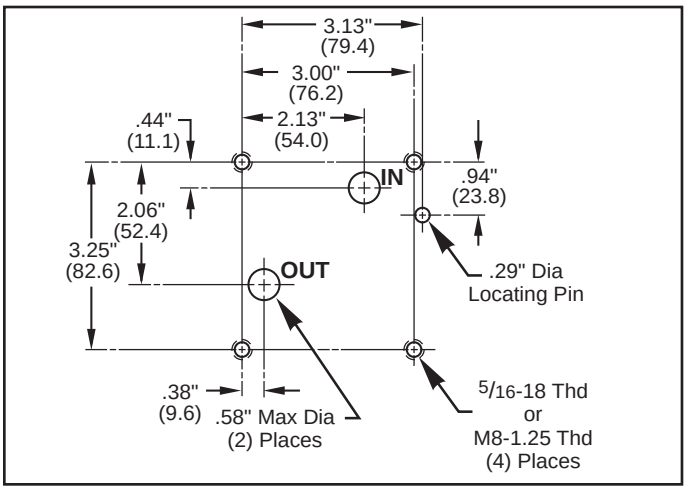

2F06 Flow Control Valve Interface

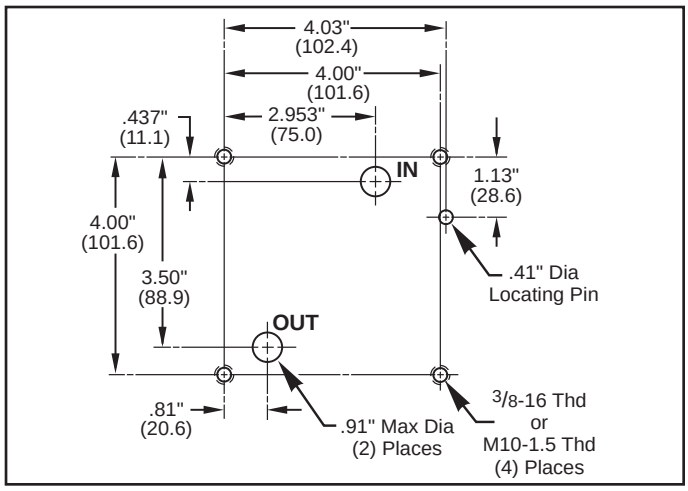

P06 Pressure Control Valve Interface

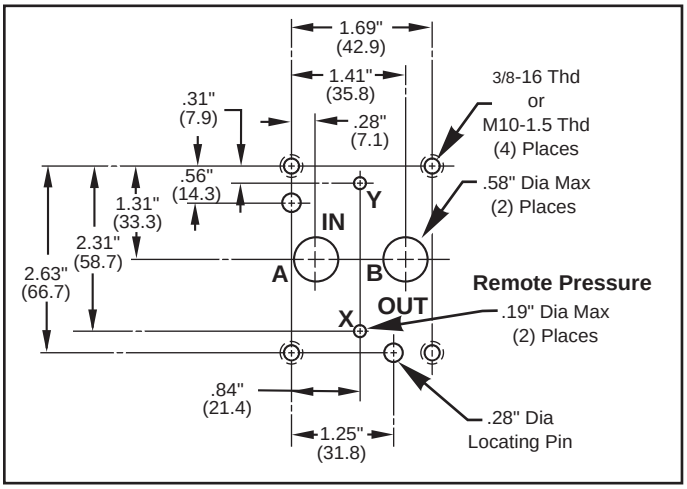

P08 Pressure Control Valve Interface

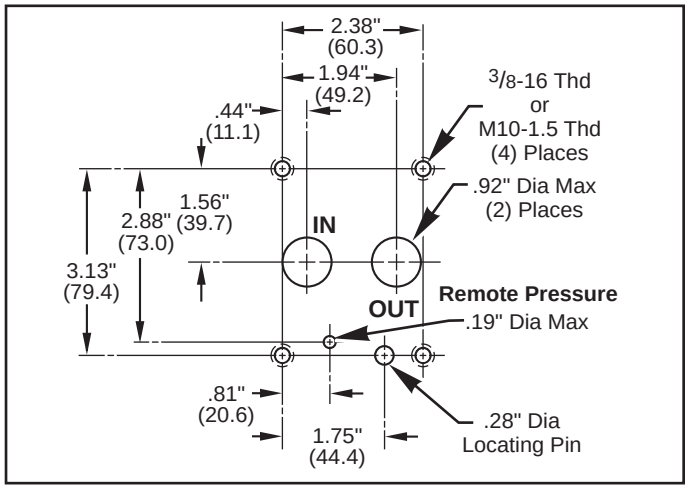

P10 Pressure Control Valve Interface

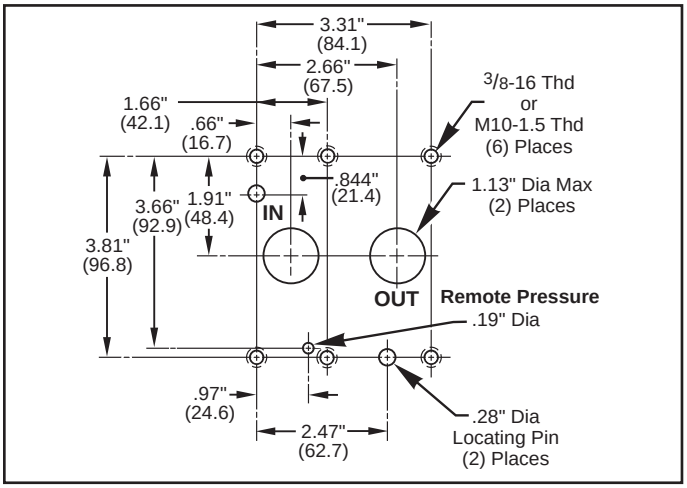

R08 Pilot Oper. Pres. Relief Valve Interface

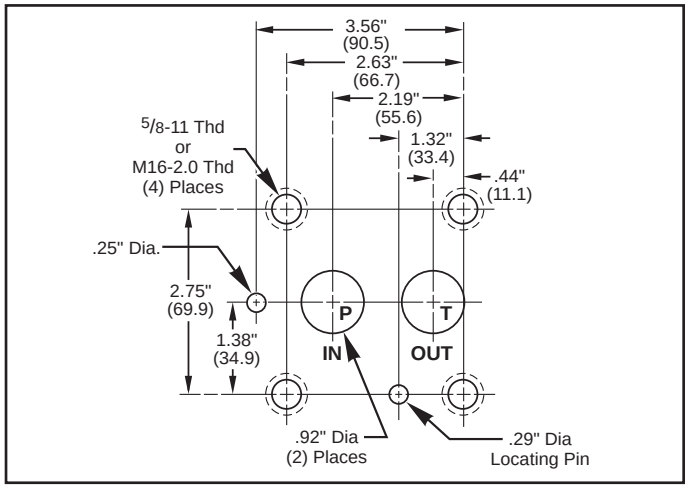

magnaloy

R

Valve Manufacturer	Directional Valve			Pressure Control & Pressures Reducing Valves		Flow Control Valves	
	NFPA DO3	NFPA DO5	NFPA DO8	NFPA P06	NFPA P10	NFPA F02	NFPA F03
Continental	V* 3M V* 5M	V* 12M	V* 35M			F12M	F30M
Double A	005	02	06	BPQ-06 WQP-06	QSA-185	QXA-02	QXA-03
Hartman	00	1/8"	3/4"	3/4"	1 1/2"		
Parker	2M	3/8"	3/4"	16	20	60	80
Racine		1/4"	3/4"	3/4"	1 1/4"	1/4"	3/8"
Rexroth	6	8 & 10	20 & 22	DZ-20 DR-20	DZ-30 DR-30	2FRMM10-1	2FRMM15-1
Rivett	01-61	02-41	68** 3/8-1			P-8622-02-41	
Vickers	DG4V	DG45401	DG55406	RCG-06 XG-06	RG-10	FG-02-1500	FG-03-1500

What you should know about Filler Breathers!

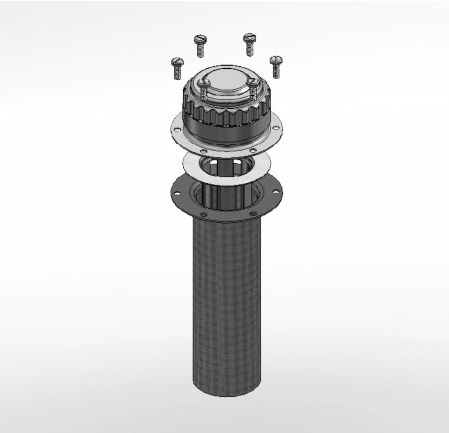

Sizing is based on the reservoir air exchange requirements, NOT the pump output. Magnaloy Filler Breather Assemblies are sized for a maximum pressure drop of .45 inches Hg.

Hydraulic users rarely change the breather filter, which can contribute to pump cavitation. A routine of regularly changing or cleaning the air filter should be developed. A vacuum indictor can be very helpful in determining the cleanliness of the air filter.

The Filler Breather filtration rating should be equal to or better than the system filtration rating.

On systems with constant fluid level in the reservoir, a pressurized Filler Breather Cap increases pump inlet pressure. Generally, the more pressure a pump has at its inlet, the quieter it will run.

The NPFA standard call for TWO filler openings, each of which should pass a minimum of 5 GPM. They should be located on opposite sides or ends of the reservoir.

The maximum air filtration allowed is 40 micron. All of Magnaloy's Filler Breather Caps are 10 Micron nominal.

The filler screen should be at least 30 mesh and should have an internal metal guard to prevent the fill spout from puncturing the screen. All Magnaloy's Screen are 30 mesh and we offer a Screen Guard Option.

Filter Selection and Life!

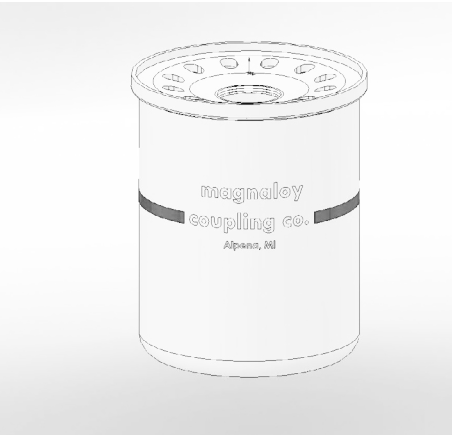

Filter life is difficult to determine. It is affected by many factors, including the operation systems condition, flow rate, viscosity of the fluid, duty cycle, environment, initial differential pressure, and cleanliness practices.

Loading is the process of plugging the pore of the media with contaminants. As the pores continue to plug, the pressure increases to maintain the fluid flow. This pressure is known as the differential pressure. At the beginning of the filter life cycle this pressure is relatively low, but pressure across the element increases as the pores in the media become plugged. The size, shape, and pore arrangement of a filter determines why some filter elements last longer than other types. Cellulose media (paper) will load more quickly than the same given area of fiberglass media (synthetic) due to the reduced number of pores per unit area.

Filter element selection is based on many factors, including operating environment, safety concerns from system failure, and criticality of system operation. Always consult your equipment manufacturer's recommendation for fluid cleanliness level.

magnaloy

Unistrut Par No.	Hycon Part No.	Hydro-craft Part No.	Hydra-Zorb Part No.	Magnaloy Part No.
		- TUBE SIZES -		
004T008	H004T008	WS-04	100025	MCC-008T
006T010	H006T010	WS-06	100037	MCC-012T
008T012	H008T012	WS-08	100050	MCC-016T
010T014	H010T014	WS-10	100062	MCC-020T
012T016	H012T016	WS-12	100075	MCC-024T
014T018	H014T018	WS-14	100087	MCC-028T
016T020	H016T020	WS-16	100100	MCC-100T
018T022	H018T022	WS-18	100112	MCC-104T
			100119	MCC-106T
020T024	H020T024	WS-20	100125	MCC-108T
022T026	H022T026	WS-22	100137	MCC-112T
024N028	H024N028	WS-24	100150	MCC-116T
026N030	H026N030	WS-26	100162	MCC-120T
028N032	H028N032	WS-28	100175	MCC-124T
030N034	H030N034	WS-30	100187	MCC-128T
032N036	H032N036	WS-32	100200	MCC-200T
034N040	H034N040	WS-34	100212	MCC-204T
		WS-36	100225	MCC-208T
038N044	H038N044	WS-38	100237	MCC-212T
040N046	H040N046	WS-40	100251	MCC-216T
042N048	H042N048	WS-42	100262	MCC-220T
046N052	H046N052	WS-46	100287	MCC-224T
		WS-48	100300	MCC-300T
050N056	H050N056	WS-50	100312	MCC-304T
058N064	H058N064	WS-58	100362	MCC-320T
066N074	H066N074	WS-66	100412	MCC-404T
		- PIPE SIZES -		
009N012	H009N012	WS-04P	200025	MCC-008P
011N014	H011N014	WS-06P	200037	MCC-012P
014N018	H014N018	WS-08P	200050	MCC-016P
017N022	H017N022	WS-12P	200075	MCC-024P
021N026	H021N026	WS-16P	200100	MCC-100P
027N032	H027N032	WS-20P	200125	MCC-108P
030N034	H030N034	WS-24P	200150	MCC-116P
038N044	H038N044	WS-32P	200200	MCC-200P
046N052	H046N052	WS-40P	200250	MCC-216P
056N062	H056N062	WS-48P	200300	MCC-300P
064N072	H064N072	WS-56P	200350	MCC-316P
072N080	H072N080	WS-64P	200400	MCC-400P
089N096	H089N096	WS-80P	200500	MCC-500P
106N114	H106N114	WS-96P	200600	MCC-600P

Differential Pressure ΔP Indicators

For use with Magnaloy SFH series Spin-On Filter Head

DP03 Series

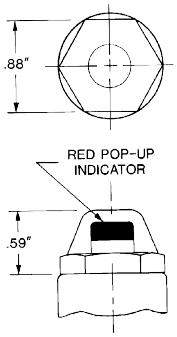

Low Pressure Visual Indicator
200 PSI max Operating Pressure
Temperature range up to 150^0 F
Automatic Resetting
Factory Installed, Available as kit for field replacement
For use with SFH Series Head Only

DP05 Series

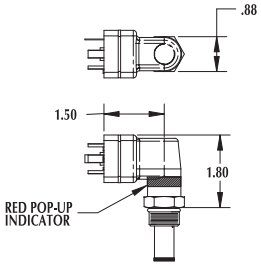

Cartridge Style Visual/Electrical Indicator
Hirschman (DIN 43650 Type AM Receptacle 11mm)
1NO, 1NC, & Common SPDT Switch (3 pole & ground)
5A; 125/250 VAC, 24 VDC (Resistive)
6000 psi max Operating Pressure
Temperatures up to 200F
Automatic Resetting
Factory Installed. Available as kit for field replacement.

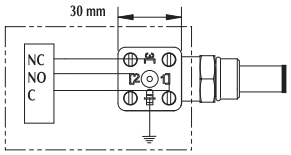

DP06 Series

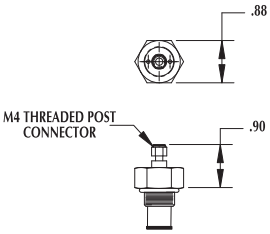

Cartridge Style Single Wire DC Indicator
200mA @ 36VDC
Momentary - Normally Open Circuit
6000 psi max Operating Pressure
Temperatures up to 200F
Automatic Resetting
Factory Installed. Available as kit for field replacement.
Ground Through Filter Head to Chassis. (In Oil)

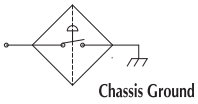

magnaloy

Filter Efficiency Standard

ISO 4572: 1981
ISO 16889: 1999

BETA Ratio Information

1. Beta Ratio means counting particles less than 40 Micron in size using a test dust as the test contaminant

2. Beta Ratio equals: $\frac{\text{Particle count* in oil up stream of filter}}{\text{Particle count* in oil down stream of filter}}$

   * The number of particles of a given size or greater per unit volume

3. Example: $\frac{\text{2,000 Particles 10um or greater in oil sample before filter}}{\text{500 Particles 10 um or greater in oil sample after filter}} = 4.0$

   -OR-

   $\frac{2{,}000}{500} = 4.0$ (Filter removed 75% of particles 10 um OR GREATER)

4. Terminology: $B_{10} = 4.0$ (Beta 10 Ratio equals 4.0)

5. Ratio Numbers and Equivalent Efficiencies:

   $Beta_x$ = 2.0 Represents 50% Efficiency (Nominal Rating)
   $Beta_x$ = 20.0 Represents 95% Efficiency
   $Beta_x$ = 75.0 Represents 98.67% Efficiency (Absolute Rating)
   $Beta_x$ = 200.0 Represents 99.5% Efficiency

Note: *Any Beta greater than 100 adds less than 1% to overall efficiency, and greatly increases pressure drop through the filter.*

Typical Stainless Steel Wire Cloth Media

Mesh Size	Degrees of Filtration
30	560 Micron
60	280 Micron
100	141 Micron
200	75 Micron
200 x 600	20 Micron
200 x 1400	10 Micron
325 x 1900	3 Micron

Filter Selection Data

Fluid Viscosity & Flow Capacity

The single most critical variable in determining the flow capacity of a filter is the viscosity of the fluid passing through it. Pressure drop (ΔP) produced by flow through a filter assembly is directly proportional to the viscosity of the fluid being filtered. At any given flow rate, a lower viscosity fluid will produce less pressure drop (and greater flow capacity) than that of a higher viscosity fluid.

Fluid Viscosity & Temperature

A fluids viscosity is governed by its temperature. As a fluid's temperature increases, its viscosity decreases. Use a temperature versus viscosity chart to determine the viscosity of the fluid used in your system at its normal operating temperature.

Estimating Pressure Drop (ΔP)

All pressure drop data found in this catalog is based on 150 SUS oil. If the fluid to be filtered in your application has a viscosity of 150 SUS at the system's normal operating temperature, pressure drop values can be taken directly off the graphs. If the fluid's viscosity is not 150 SUS, use the formula below to estimate the pressure drop.

$$\text{Estimated Pressure Drop } (\Delta P) \text{ through filter assembly} = \text{Pressure Drop Value taken from graph} \times \frac{\text{Viscosity of Fluid at System Operating Temperature}}{150}$$

Filtration Application Guidelines

Suction Strainers:

Maximum pressure drop : 1" Hg
Maximum line velocity: 5 feet per second

Suction Line Filters:

Maximum pressure drop: No more than 50% of the Maximum allowable vacuum recommended by the pump manufacturer (at normal operating temperature with a clean filter element).
Maximum line velocity: 5 feet per second

Return Line Filters:

Maximum pressure drop: No more than 50% of the filter by-pass valve setting at normal operating temperature with a clean filter element.
Maximum line velocity: 15 feet per second
A By-Pass Valve should ALWAYS be included on a Return Filter

Pressure Filters:

Maximum pressure drop: No more than 50% of the filter by-pass valve setting at normal operating temperature with a clean filter element.
Maximum line velocity: 25 feet per second

Hydraulic Pipe, Tube and Hose Flow Data

magnaloy

A collection of useful hydraulic pipe, tube and hose information showing material classes, recommended fluid speeds and fluid flow capacities based on these speeds.

NORMAL MAXIMUM FLUID SPEEDS

	IN SUCTION LINES		IN PRESSURE AND RETURN LINES			
	Gerotor and Gear Pumps	Vane and Piston Pumps	Up to 2 Feet Long	2 Feet to 4 Feet Long	4 Feet to 8 Feet Long	Over 8 Feet Long
Typical Hydraulic Fluids	6 Ft/Sec.	4 Ft/Sec.	30 Ft/Sec.	20 Ft/Sec.	15 Ft/Sec.	10 Ft/Sec.
Fire Resistant Fluids	4 Ft/Sec.	3 Ft/Sec.	25 Ft/Sec.	15 Ft/Sec.	10 Ft/Sec.	7.5 Ft/Sec.

MATERIALS

	Pipe Fittings	Pipe	Tube Fittings	Tube
Class 1	150 PSI Malleable Iron	Pickled, Schedule 40	SAE 37° Flare Fitting, 3 Piece	1010 Steel
Class 2	2000 PSI Forged Steel	Pickled, Schedule 80		
Class 3	3000 PSI Forged Steel			304 Stainless Steel
Class 4	6000 PSI Forged Steel	Pickled, Schedule 160		

R

PIPE DATA

Class 1 (Schedule 40 Steel Pipe)

Nominal Size	Burst PSI	GPM @ 3 Ft/Sec.	GPM @ 4 Ft/Sec.	GPM @ 10 Ft/Sec.	GPM @ 15 Ft/Sec.
1/4	19,500	0.98	1.24	3.27	4.9
3/8	16,200	1.80	2.40	6.00	9.0
1/2	15,600	2.85	3.85	9.50	14.3
3/4	12,900	5.01	6.78	16.7	25.1
1	12,200	8.08	10.8	27.0	40.6
1 1/4	10,100	14.0	18.8	46.8	70.3
1 1/2	9,100	19.0	25.8	63.7	95.6
2	7,800	31.4	42.2	105	157
2 1/2	8,500	44.8	60.4	150	225
3	7,400	69.1	93.8	232	347
3 1/2	6,800	92.4	125	310	465
4	6,300	119	150	399	598
4 1/2	5,900	149	202	499	749
5	5,500	187	252	627	940
6	5,100	270	364	904	1357

Class 2 and 3 (Schedule 80 Steel Pipe)

Nominal Size	Burst PSI	GPM @ 10 Ft/Sec.	GPM @ 15 Ft/Sec.
1/4	26,400	2.2	3.4
3/8	22,500	4.4	6.6
1/2	21,000	7.3	11.0
3/4	17,600	13.6	20.3
1	15,900	22.5	33.8
1 1/4	13,900	40.1	60.2
1 1/2	12,600	55.3	83.0
2	11,000	92.5	139
2 1/2	11,500	133	199
3	10,300	207	310
3 1/2	9,500	278	418
4	9,000	360	540
4 1/2	8,500	453	679
5	8,100	570	855
6	7,800	816	1225

Class 5 (Schedule 160 Steel Pipe)

Nominal Size	Burst PSI	GPM @ 10 Ft/Sec.	GPM @ 15 Ft/Sec.
1/4			
3/8			
1/2	26,700	5.34	8.01
3/4	25,000	8.49	12.7
1	22,300	16.3	24.5
1 1/4	18,100	33.1	49.7
1 1/2	17,700	44.0	66.1
2	17,500	70.2	105
2 1/2	15,700	111	167
3	15,000	170	254
3 1/2			
4	14,200	291	436
4 1/2			
5	13,500	458	686
6	13,000	662	994

TUBE DATA

Class 1 and 2 (1010 Steel)

Outside Diameter	Wall Thick.	Burst PSI	GPM @ 3 Ft/Sec.	GPM @ 4 Ft/Sec.	GPM @ 10 Ft/Sec.	GPM @ 15 Ft/Sec.
3/8	.049	14,370	.56	.76	1.9	2.8
1/2	.049	10,780	1.19	1.60	4.0	5.94
5/8	.065	11,440	1.80	2.40	6.0	9.0
3/4	.072	10,560	2.70	3.58	8.98	13.5
7/8	.083	10,430	3.69	4.92	12.3	18.5
1	.095	10,450	4.82	6.42	16.1	24.1
1 1/4	.120	10,460	7.49	10.0	25.0	37.6
1 1/2	.134	9,830	11.1	15.0	37.2	55.7

Class 3 (304 Stainless Steel)

Outside Diameter	Wall Thick.	Burst PSI	GPM @ 10 Ft/Sec.	GPM @ 15 Ft/Sec.
3/8	.049	19,600	1.9	2.8
1/2	.049	14,700	4.0	5.9
5/8	.065	15,600	6.0	9.0
3/4	.065	13,000	9.4	13.5
7/8	.095	11,940	11.5	18.5
1	.095	14,250	16.1	24.1
1 1/4	.120	14,400	25.0	37.6
1 1/2	.120	12,000	38.9	55.7

Class 5 (304 Stainless Steel)

Outside Diameter	Wall Thick.	Burst PSI	GPM @ 10 Ft/Sec.	GPM @ 15 Ft/Sec.
3/8	.049	19,600	1.5	2.8
1/2	.065	19,500	3.3	5.0
3/4	.095	19,500	7.7	11.5
7/8	.120	20,570	9.9	14.8

HOSE DATA

Nominal Size	Inside Diameter	GPM @ 3 Ft/Sec.	GPM @ 4 Ft/Sec.	GPM @ 10 Ft/Sec.	GPM @ 15 Ft/Sec.
4	1/4	.46	.62	1.54	2.30
6	3/8	1.03	1.38	3.44	5.16
8	1/2	1.84	2.44	6.12	9.18
10	5/8	2.87	3.82	9.56	14.3
12	3/4	4.13	5.52	13.8	20.7
16	1	7.34	9.72	24.4	36.7
20	1 1/4	11.5	15.2	38.2	57.4
24	1 1/2	16.5	22.0	55.0	82.6
32	2	29.4	39.2	98.0	147
40	2 1/2	45.9	61.2	153	230
48	3	66.1	87.8	220	330
56	3 1/2	90.0	120	300	450
64	4	118	156	392	588

PIPE, TUBE, HOSE INFORMATION

Equivalent Sizes (Common)

Nominal Pipe Size	Tube Outside Diameter	Hose Inside Diameter	Hose Size	SAE Straight Thread - O'Ring Size	SAE Straight Thread - O'Ring Thread
1/4	3/8	1/4	4	6	9/16-18
3/8	1/2	3/8	6	8	3/4-16
1/2	5/8	1/2	8	10	7/8-14
	3/4	5/8	10	12	1 1/16-12
3/4	7/8	3/4	12	14	1 3/16-12
1	1	1	16	16	1 5/16-12
1 1/4	1 1/4	1 1/4	20	20	1 5/8-12
1 1/2	1 1/2	1 1/2	24	24	1 7/8-12
2		2	32		

Mesh to Micron Conversion Chart

US MESH	INCHES	MICRONS	MILLIMETERS
3	0.2650	**6730**	6.730
4	0.1870	**4760**	4.760
5	0.1570	**4000**	4.000
6	0.1320	**3360**	3.360
7	.01110	**2830**	2.830
8	0.0937	**2380**	2.380
10	0.0787	**2000**	2.000
12	0.0661	**1680**	1.680
14	0.0555	**1410**	1.410
16	0.0469	**1190**	1.190
18	0.0394	**1000**	1.000
20	0.0331	**841**	0.841
25	0.0280	**707**	0.707
30	0.0232	**595**	0.595
35	0.0197	**500**	0.500
40	0.0165	**400**	0.400
45	0.0138	**354**	0.354
50	0.0117	**297**	0.297
60	0.0098	**250**	0.250
70	0.0083	**210**	0.210
80	0.0070	**177**	0.177
100	0.0059	**149**	0.149
120	0.0049	**125**	0.125
140	0.0041	**105**	0.105
170	0.0035	**88**	0.088
200	0.0029	**74**	0.074
230	0.0024	**63**	0.063
270	0.0021	**53**	0.053
325	0.0017	**44**	0.044
400	0.0015	**37**	0.037

Make the Connection with magnaloy

Whatever your Fluid Power Unit needs,
Magnaloy has the products
to keep you connected.

Flexible Drive Couplings

Top-of-the-line magnesium couplings are lighter, yet stronger than either cast iron or aluminum. They also offer better corrosion resistance and easier handling.

Pump/Motor Mounts

Precision machined aluminum & custom steel pump/motor mounts directly connect the motor and pump while ensuring accurate shaft alignment and enclosing the coupling. Vertical and horizontal models readily available from stock.

PM 90 Couplings

Economical PM-90 Iron Powder Couplings have long lasting nitrile, hytrel or urethane inserts. Double set screws give excellent gripping power.

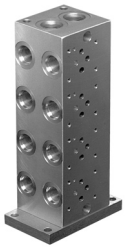

Magnaloy Hydraulic Bar Manifolds & Accessories

Complete line of inline Bar Manifolds, Subplates, Cover Plates, Valve Adaptors, Integrated Circuit Manifolds, and Accessories to make the design and fabrication of Hydraulic Circuitry simple and easy. Wide range of sizes include: D03, D05, D05H & D08 in aluminum and steel with ports available in SAE, NPTF, BSPP, and BSPT styles. Custom design and fabrication also available, consult factory.

Rod End Couplers

Two models of accurately machined high tensile cylinder rod end alignment couplers offer 7° or 10° spherical and 1/8" parallel misalignment capabilities.

Magnaloy Reservoirs & Reservoir Accessories

Magnaloy offers a complete line of standard reservoirs and reservoir accessories. In addition, we offer custom reservoir fabrication to meet our customer specific needs. Reservoirs accessories such as Clean Out Covers and SAE Couplings are available for the "do-it-yourself" reservoir manufacturer

Accessories

Filler Breather Adaptors, Filler Breathers, Reservoir Flanges, Suction Strainers, Gauge Isolators, Liquid Level Gauges, Modular O-Ring Kits.

Magnaloy Pressure Switch

Pressure Sensing switch capable of sensing up to three (3) separate pressures. Each sensor is externally independently adjustable from 200 to 4000 psi. Viton seals provide wide fluid compatibility range.